INDUSTRIAL APPLICATIONS OF GAS TURBINES
IAGT 2010 FALL COURSE

Thursday, October 21, 2010 Theme:
Applications and Advancement of Gas Turbines

Session #1
Introduction to Gas Turbines, Cogeneration and Combined Cycle Applications

An introduction to aero-derivative and heavy-duty industrial gas turbines and their application into small, medium and large-scale cogeneration and combined-cycle projects.

Jim Noordermeer, P.Eng.
Principal Engineer
Gryphon International Engineering Services Inc.

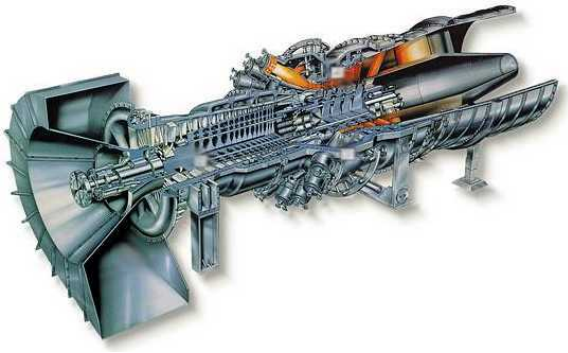

IAGT 2010
FALL COURSE

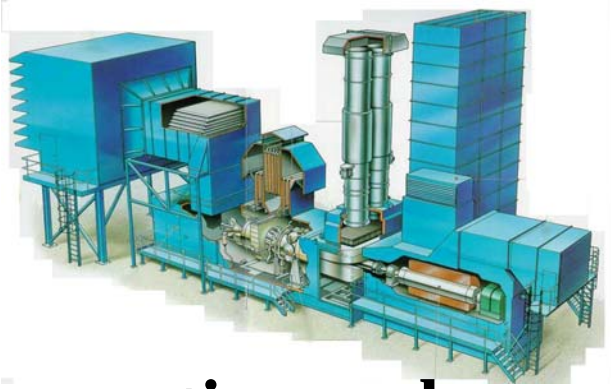

Day 1 – Session 1
Introduction to Gas Turbines, Cogeneration and Combined Cycle Applications

Gas Turbines

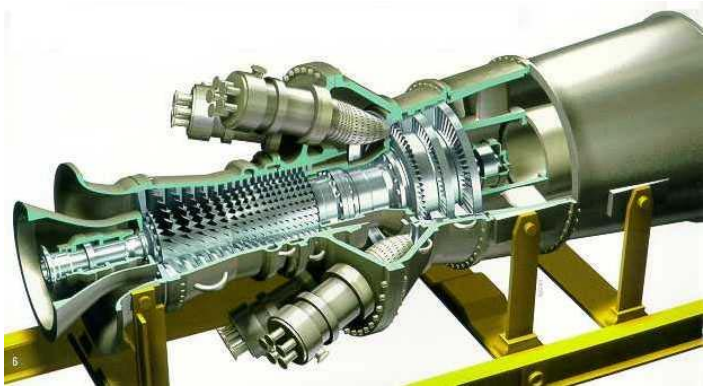

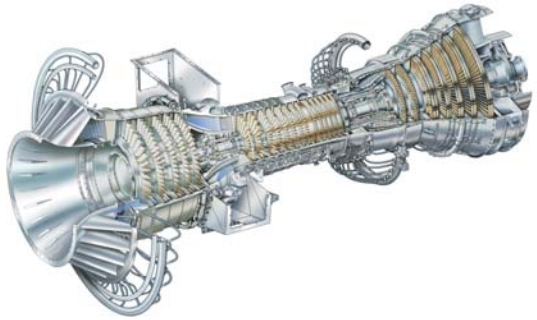

Gas Turbines for Cogeneration & Combined-Cycle ©

*Introduction to the industrial **gas turbine generator** engine:*

- *heavy-duty frame and aero-derivative,*
- *the gas turbine generator package*
- *the auxiliaries,*

For the cogeneration or combined-cycle power plant.

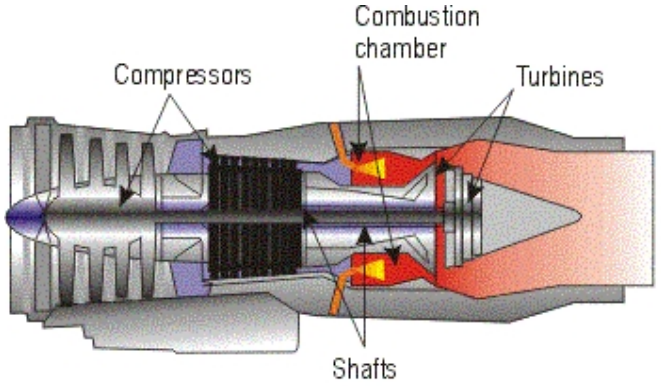

GAS TURBINE CONCEPTS

The Basic Gas Turbine Cycle

Brayton Cycle - continuously operating process using air as working fluid:

- Ambient Air (state 1)
- Compression (1 to 2)
- Continuous combustion with fuel (2 to 3)
- Expansion to atmospheric pressure (3 to 4)

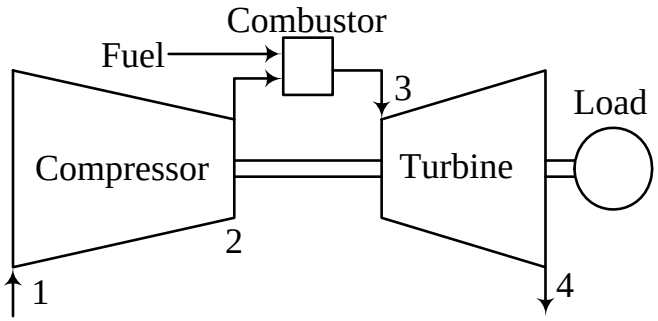

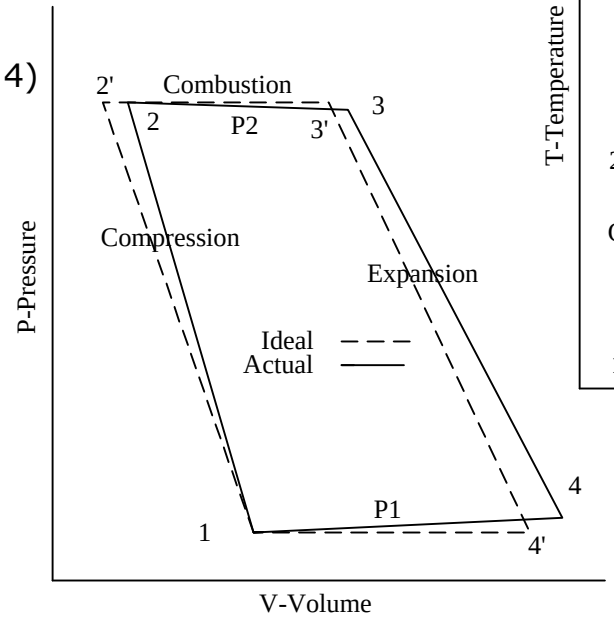

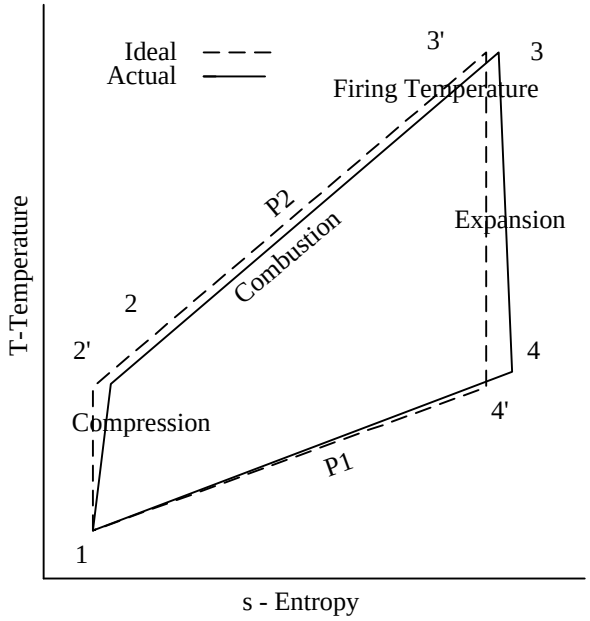

Gas Turbines for Cogeneration & Combined-Cycle ©

Turbine Section physically drives (rotates) the **Compressor Section**.

Excess Turbine Shaft Power drives the load – generator.

Firing Temperatures – T3 – have climbed from 1400 deg F, to 2000~2200 and now 2600 deg F with better turbine section materials and cooling methods.

High T3 = power output & efficiency.

Pressure Ratio – P2/P1 – High ratio = high efficiency & specific output (hp/lb/sec).

Gas turbine design pressure ratios vary:

- 7.5:1 – smaller & older technology GT's,
- 35:1 – recent, most advanced GT's.

Aircraft gas turbines:

- jet engines,
- turboprops,
- low & high-bypass turbofans

Use high pressure ratio, high firing temperature = minimum weight & frontal area.

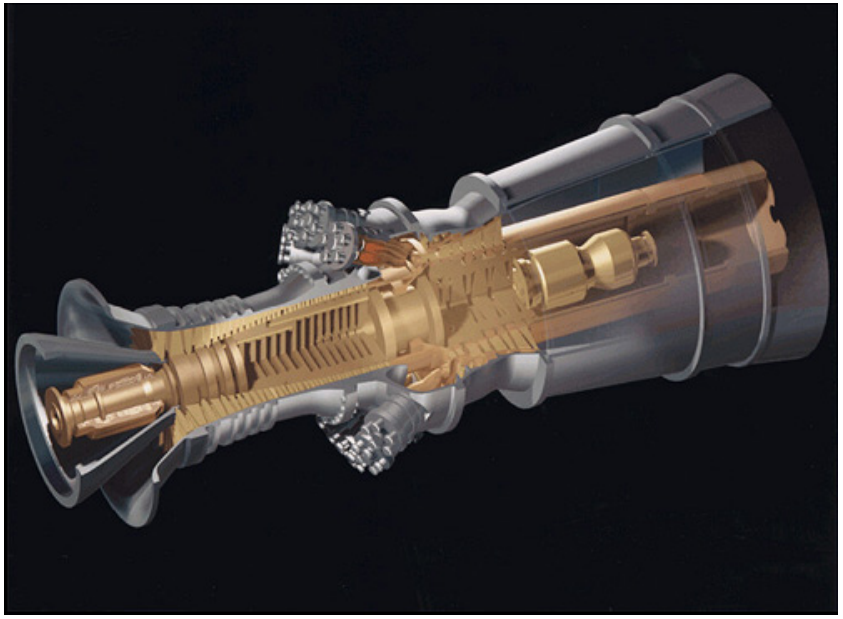

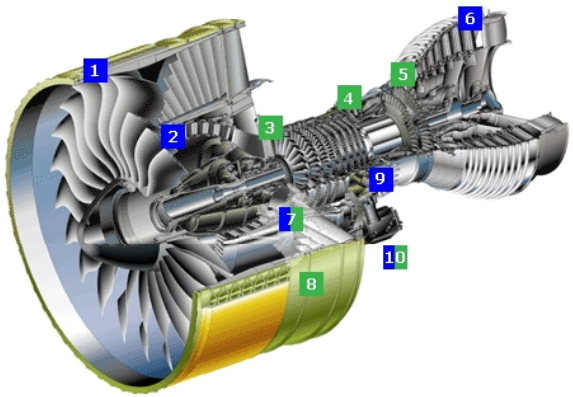

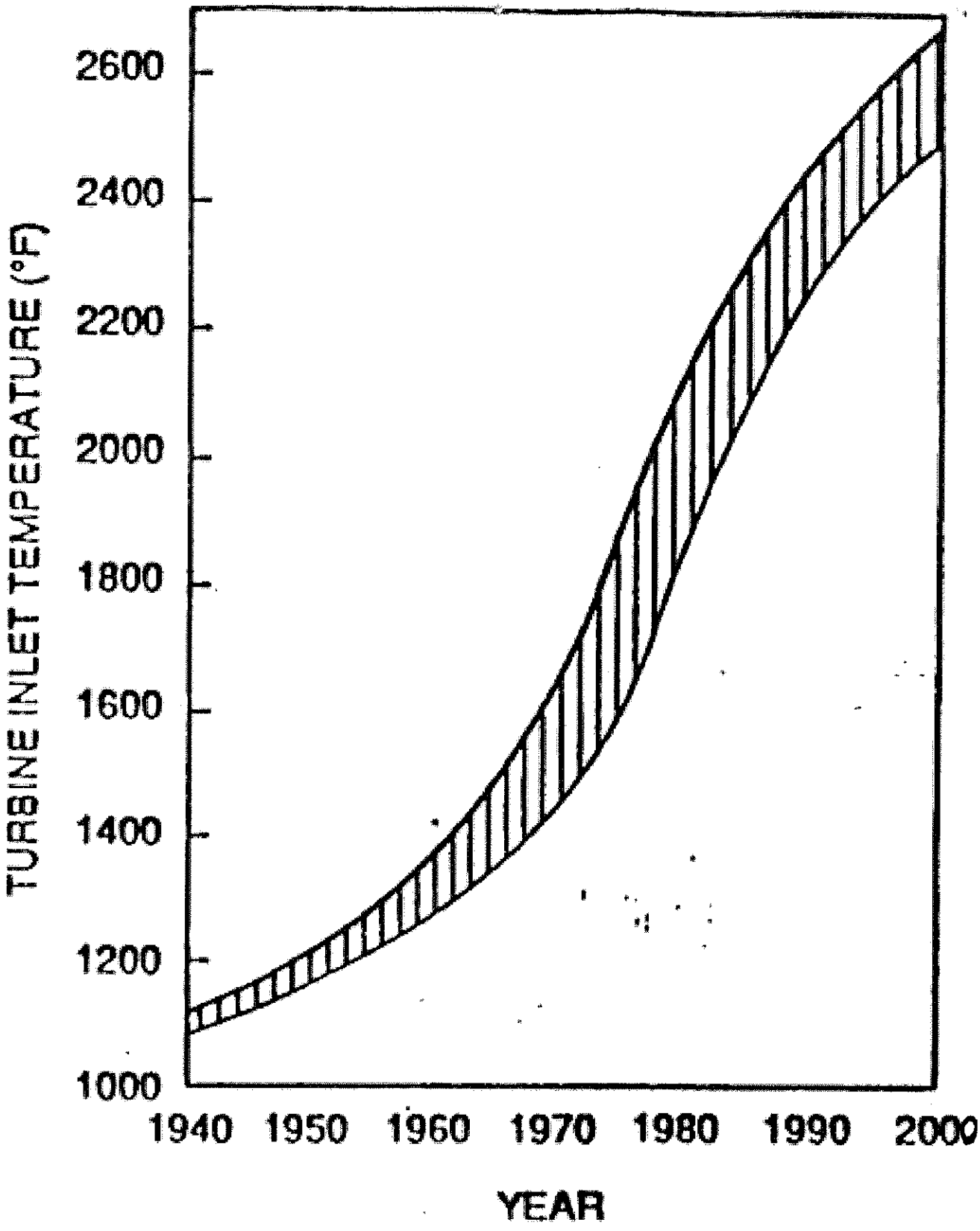

Gas Turbine Inlet Temperature Trend

Turbine Cycle Variations – of the basic cycle:

Reheat or sequential combustion – in high-pressure ratio GT's.

Hot HP Turbine Section gases reheated by combustion of additional fuel (3a) .

Reheated gases enter into LP turbine section (3a to 4).

Reheat configuration:

- increases LP Turbine output,
- raises the turbine's exhaust temperature,
- increases simple-cycle power output,
- increases combined-cycle power output.

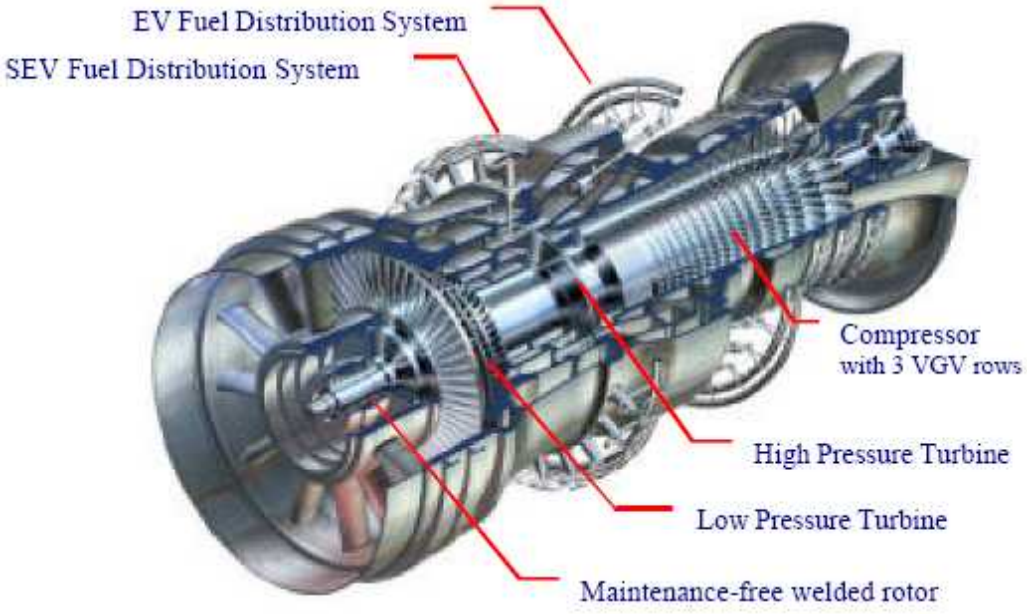

Example: ***Alstom GT24/26.***

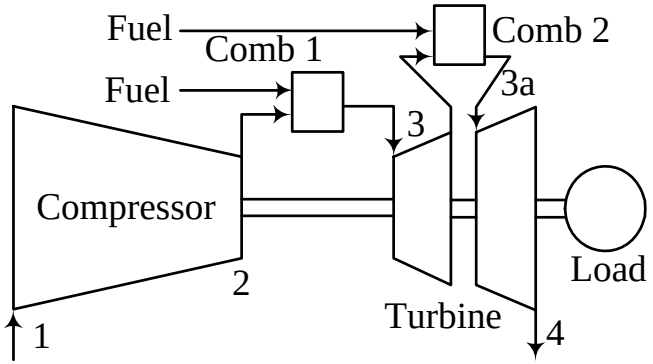

Gas Turbines for Cogeneration & Combined-Cycle ©

Turbine Cycle Variations – of the basic cycle:

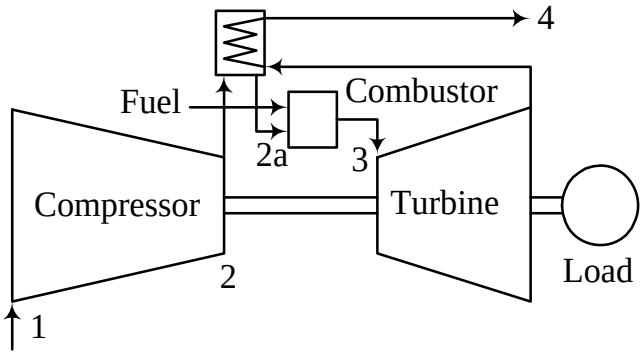

Recuperated or Regenerated GT's

For low-pressure ratio units with high firing temperatures.

External regenerative heat exchanger - transfers exhaust heat to compressor discharge air.

Regenerative Configuration:

- Saves fuel
- Increases efficiency

Example: ***Solar Mercury****.*

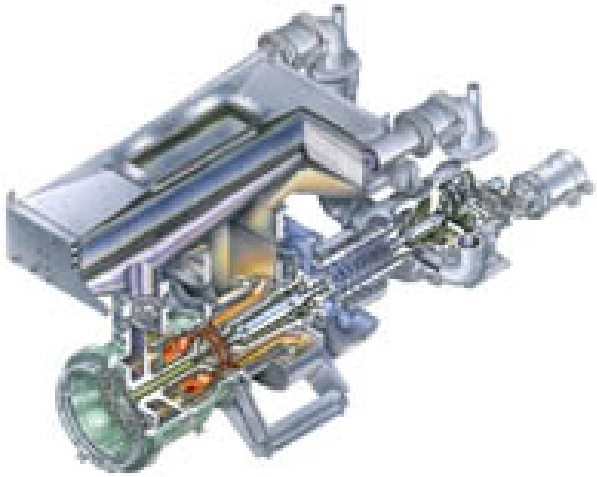

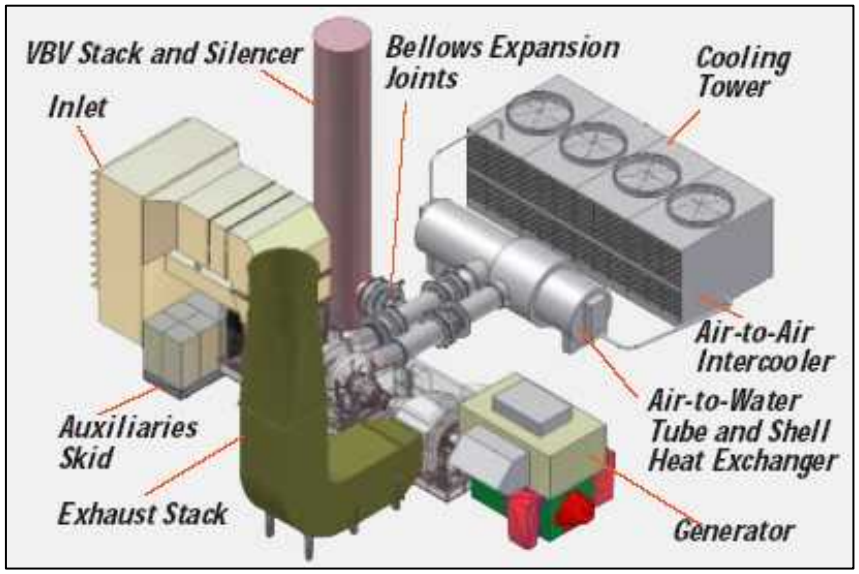

Inter-Cooled GT's

For high-pressure ratio multi-shaft units.

LP compressor air directed to external heat exchanger.

Cooling medium (water or air) decreases air temperature. Cooled air re-enters HP compressor.

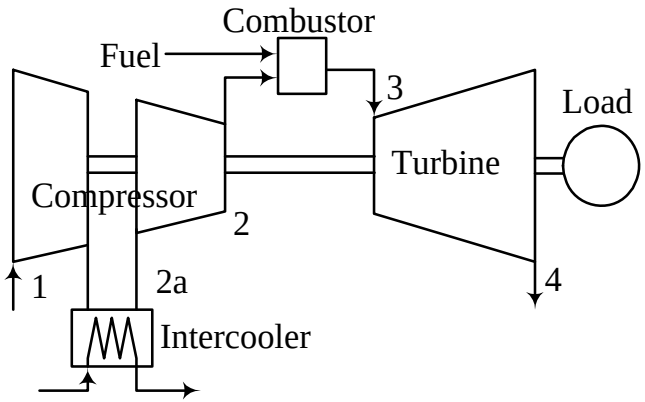

Intercooled Configuration:

- decreases HP compressor power,
- improves efficiency & specific output

Example: new **100 MW GE LMS100**, w/ air or water cooling.

Gas Turbines for Cogeneration & Combined-Cycle ©

Turbine Cycle Variations – of the basic cycle:

Spraywater Cooling – like intercooling.

Clean water injected before the LP compressor, and between LP & HP LM6000 compressor of the multi-shaft aero-derivative ***GE LM6000 Sprint***

- Increases HPC mass flow
- Increased pressure ratio
- Increased power output & efficiency @ high ambients

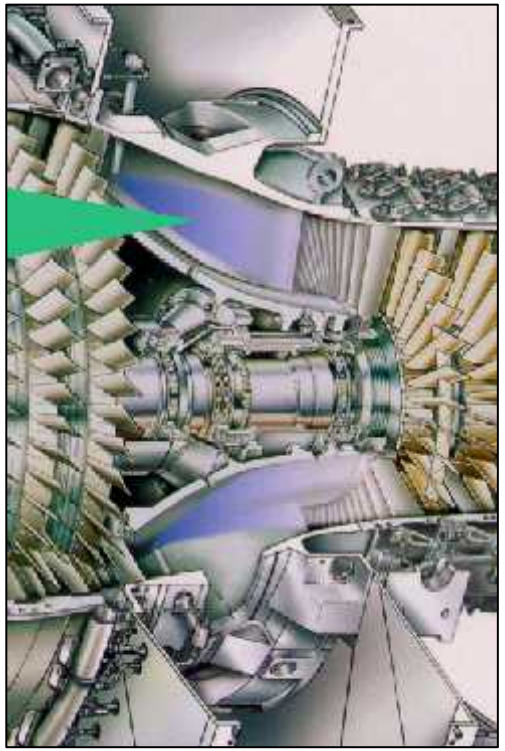

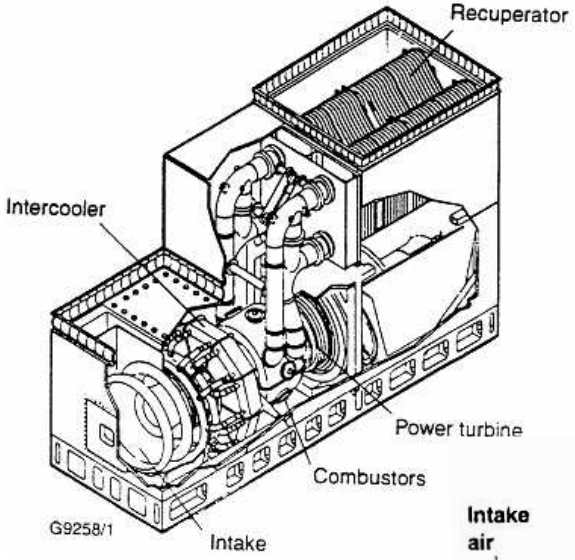

Intercooled & Recuperated GT

Rolls-Royce WR-21 marine drive unit.

Special high-efficiency configuration.

Exhaust recuperator & sea-water cooled intercooler.

For interest only - there are no land applications.

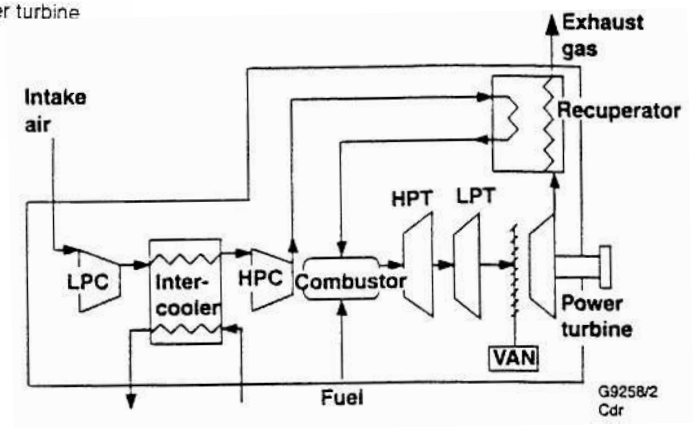

Gas Turbines for Cogeneration & Combined-Cycle ©

Creep-resistant directionally-solidified (DS) & single-crystal (SC) blade production technology – introduced from the aircraft GT world.

Turbine row assembly, showing blade attachments to the rotating disk, and blade cooling air exit holes

Thermal barrier coatings (TBC) employed to protect aerodynamic surfaces & materials from corrosion, oxidization and erosion.

Turbine Nozzle w/ TBC & cooling *air exit holes*

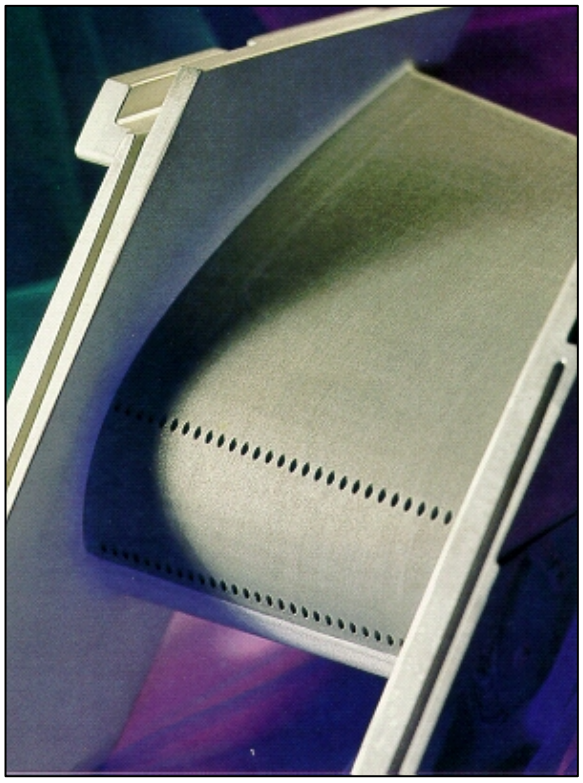

Gas Turbines for Cogeneration & Combined-Cycle ©

Gas Turbine Variations – from the single-shaft design.

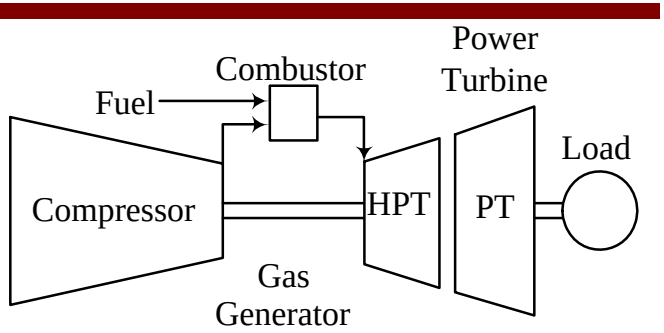

Single-Shaft with PT – industrial & aero-derivative units.

Single-shaft GT operates at the speed and firing temperature – keeps itself self-sustained.

It's exhaust gases passed to aerodynamic-coupled free power turbine (PT) which drives the load – at fixed (generator) or variable (mechanical drive) speed.

Frequently called a "jet", or "gas-generator", for convenience.

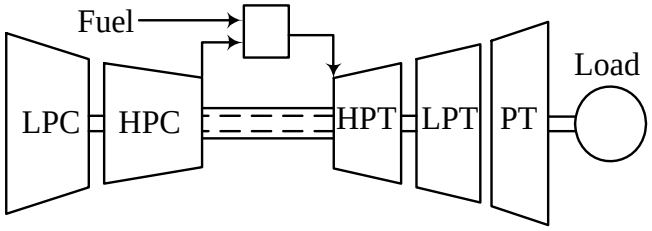

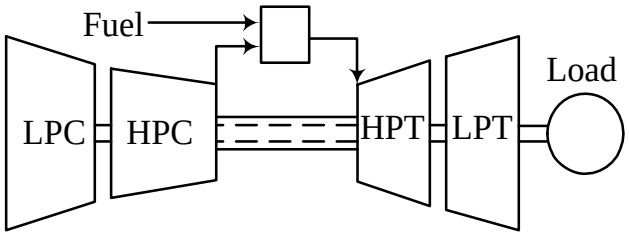

Multi-shaft, with & without PT

Industrial units designed for variable-speed mechanical drive or derivatives of aircraft engines.

Basic compressor & turbine sections divided into HP and LP units. HP and LP each operates at different speed – depends upon load & ambient conditions. The LP compressor (LPC) is coupled to and is driven by LP turbine (LPT). The HP compressor (HPC) is coupled to and is driven by the turbine (HPT).

In some three-shaft machines, an intermediate compressor (IPC) & turbine (IPT) also used, in between LP & HP sections (configuration not shown).

Fixed or variable-speed loads are driven off LP shaft.

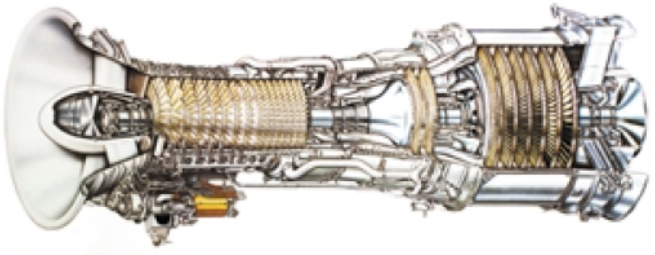

Some units can drive off cold-end or hot-end of LP shaft.

In some cases, these multi-shaft units, act as "gas generator", and PT is required to drive the load.

Gas Turbines for Cogeneration & Combined-Cycle ©

AERO-DERIVATIVE & HEAVY-DUTY INDUSTRIAL GAS TURBINES

The "THERMODYNAMIC COUSINS" – sharing the same basic cycle.

Aero-Derivative GTs – based on aircraft engines. Usually low weight & low frontal area (generally inconsequential for industrial service).

The original **jet engines** have their nozzles removed & power turbines (PT's) installed for industrial service.

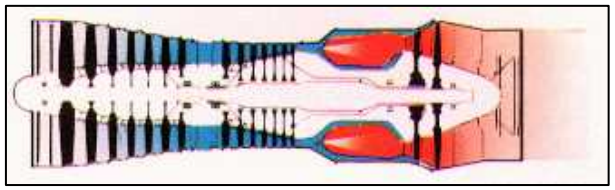

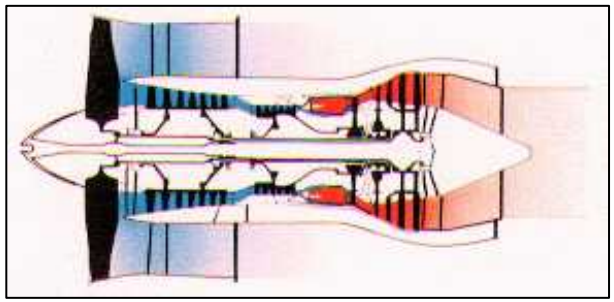

Later **turbo-prop** & **turbo-fan** engines – industrialized by redesign of the prop or fan takeoff drives'; or a PT.

Most aero-derivatives (compared to same-size industrial cousins):

- very efficient – because of high T3 and P2/P1
- less steam generation due to lower flows.

Major Maintenance – by complete removal of gas turbine from package – special lifting frames required.

Modules disassembled into smaller components - LPC, HPC, combustion module, HPT and LPT, etc.

Minor maintenance activities – conducted at site.

Major maintenance & overhaul - unit returned to certified shop.

Lease engines available – replaces original engine while under repair.

Gas Turbines for Cogeneration & Combined-Cycle ©

Heavy-Duty Industrial GTs – heavier and more rugged.

Optimized to operate over narrow speed range & base-load duty.

Typically – scheduled maintenance intervals longer than aero units.

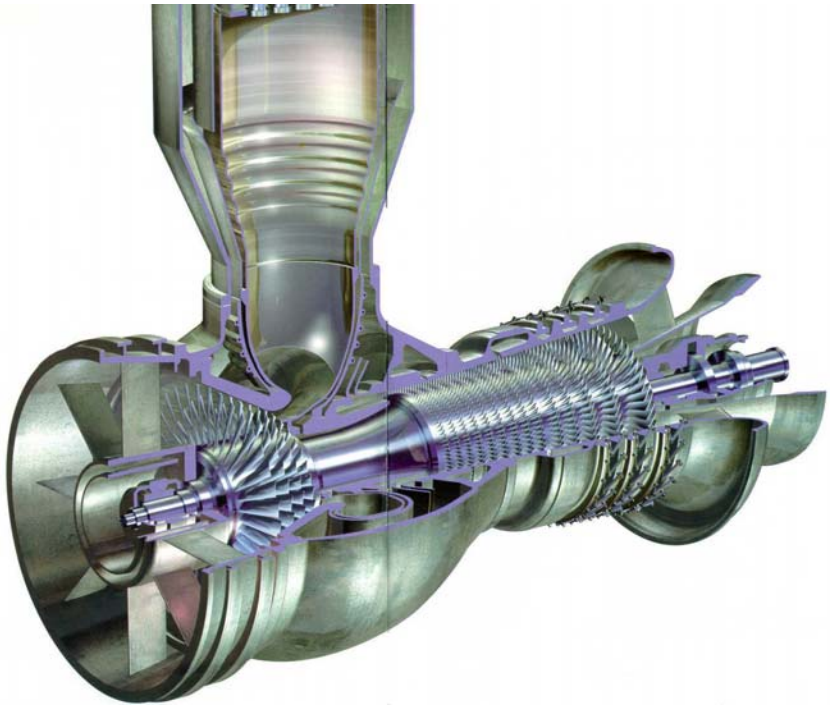

Heavy multi-cylinder castings and fabrications.

Large bolted horizontal and vertical split joints.

Heavy built-up rotors & journal bearings.

Large solid couplings

Large baseplates and frames.

Major Maintenance – usually accomplished at site:

- removal of top half cylinder;
- removal of diaphragms and blade rings;
- lifting and removal of the turbine rotor;
- subsequent blade removal.

Gas Turbines for Cogeneration & Combined-Cycle ©

COMPARISON – Aero-Derivative & Heavy-Duty Industrial Gas Turbines

	Aero-Derivative	Heavy-Duty Industrial
Performance	Up to 50 MW. Up to 41~42% efficiency (LHV). Generally, less waste heat opportunity from the exhaust gases.	Up to 240 MW+. Up to 35~40% efficiency (LHV). Good waste heat opportunity. Large units with high exhaust temperatures allow reheat combined-cycle
Fuel Aspects	Natural gas to light distillates and jet fuels. Most require relatively high gas pressures.	Natural gas through to distillates and cheaper heavy or residual fuels. Generally require lower gas pressures. Expensive treatment of heavy / residual fuels is required.
Start-Up	Quick startup – 5~20 minutes. Relatively low horsepower starters usually electro-hydraulic	20 to 60 minutes depending on size. High horsepower diesel or motor starters, also some are started by the motoring of the generator itself
Loading	Quick loading, sometimes 10~25%/min	Slower loading, 1~10%/min depending on size
Shutdown	Many larger units require a short time of motoring to cool internals after a trip, but can then be shutdown	Many units require 1~2 days on turning gear after shutdown, but most can be motored to assist quicker cool down

IAGT 2010
FALL COURSE

Day 1 – Session 1
Introduction to Gas Turbines, Cogeneration and Combined Cycle Applications

HRSGs

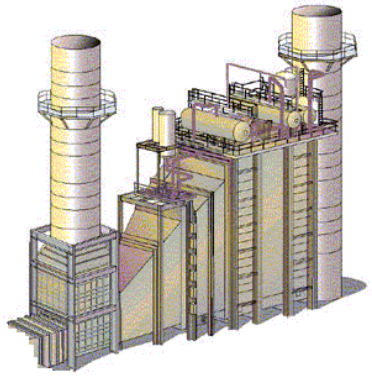

HRSG

Heat Recovery Steam Generator

- Also referred to as waste heat boiler
- Cools hot gases – most commonly (and most importantly for this group) the exhaust of a gas turbine
- Generates steam and regains energy

FUNDAMENTAL PARTS OF HRSG

Basic HRSG Components

- Economizers/Preheaters
- Evaporators
- Superheaters/Reheaters

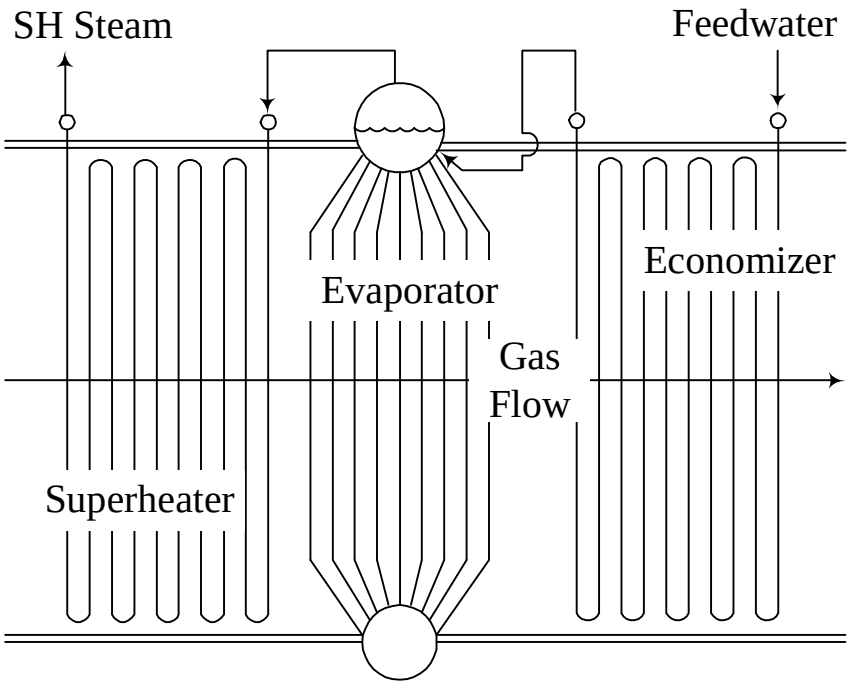

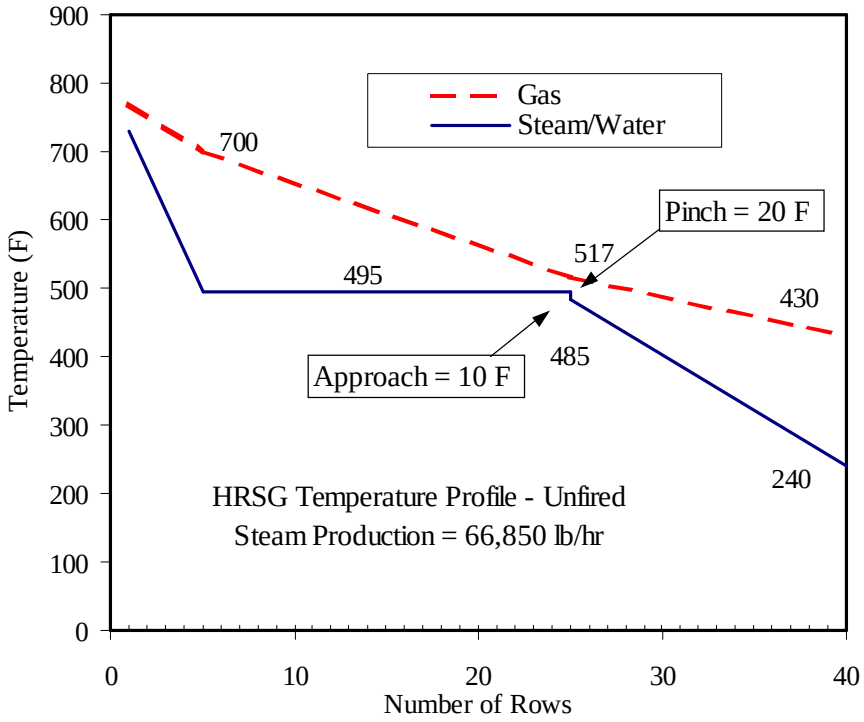

ECONOMIZERS

- Preheats water prior to entry into the steam drum
- Desirable to prevent steam from forming in the economizer
- Incoming water temperatures vary from 50 F to 250 F and heated to approx. 15 F below drum saturation temp.
- Varying tube materials used such as carbon steel, stainless steel and duplex steel

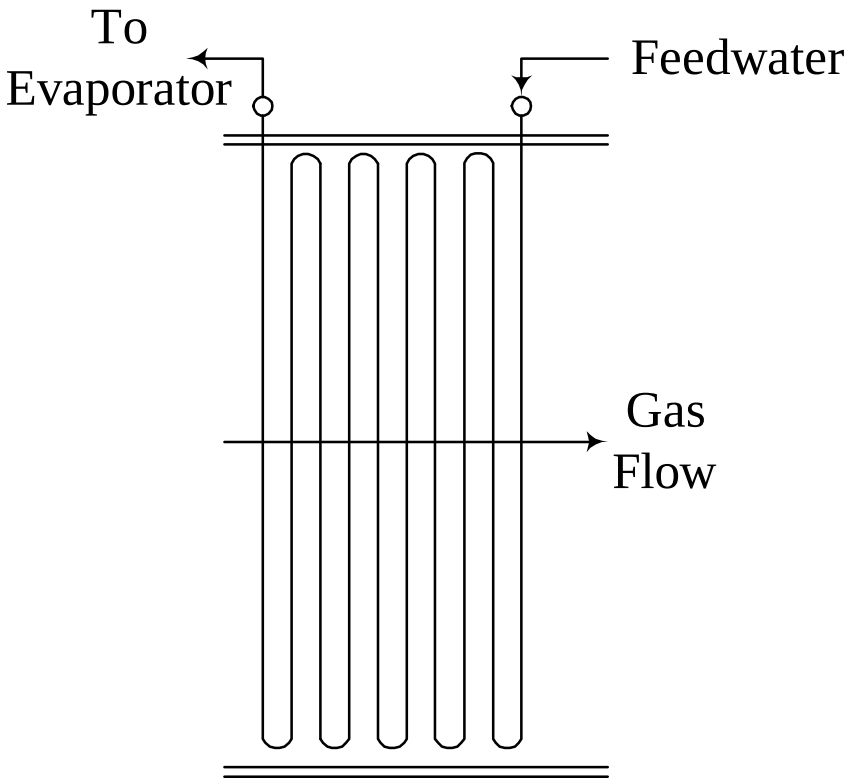

EVAPORATOR

- Vaporize water and produce steam
- Water/steam circulates from lower drum to steam drum
- Steam exits from the steam drum after passing through steam separating equipment
- Water level must be carefully maintained to prevent dryout of tubes or carryover of solids

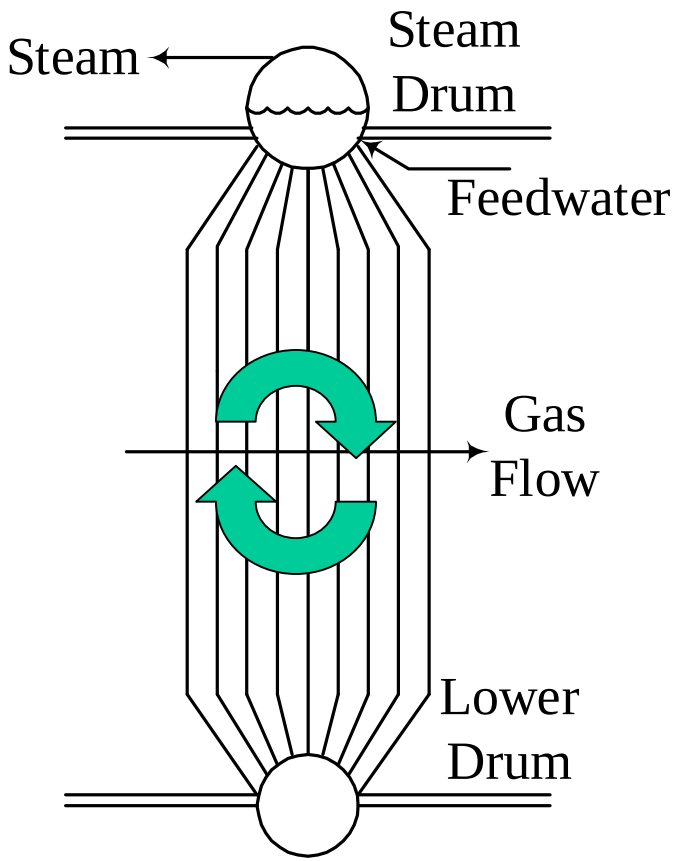

SUPERHEATERS/REHEATERS

- Saturated steam from evaporator (solids removed) is sent to superheater to produce dry steam
- Dry steam is required for steam turbines

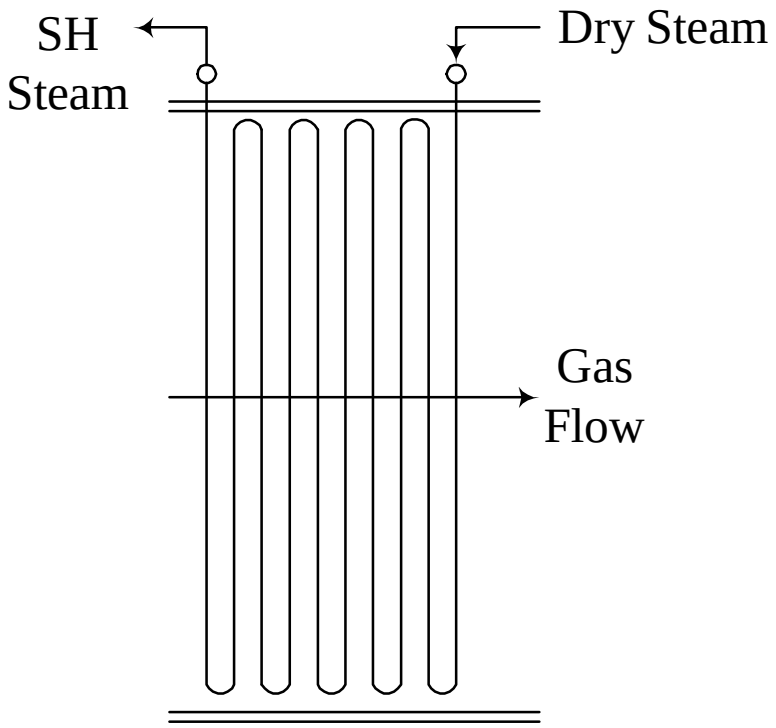

HRSG TYPES

Three (3) Main Types

- NATURAL CIRCULATION HRSGs
- FORCED CIRCULATION HRSGs
- ONCE THROUGH HRSGs

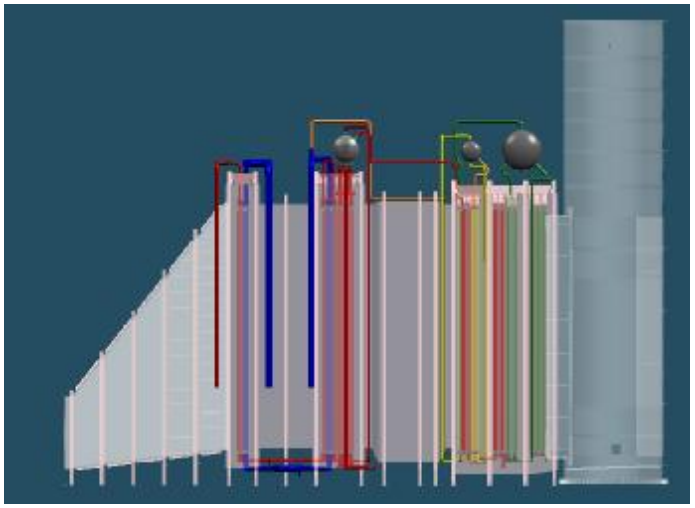

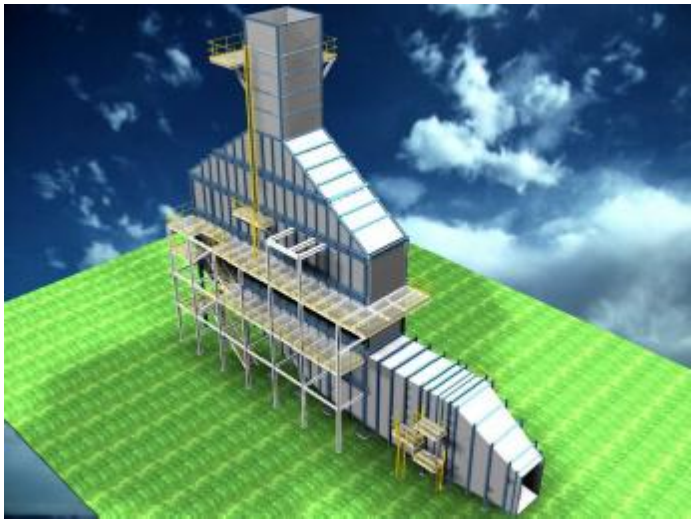

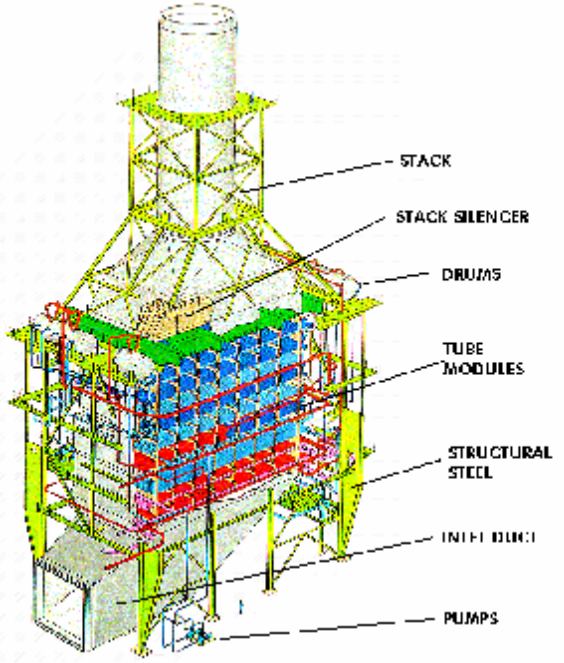

NATURAL CIRCULATION HRSG

- Most common design
- Typically horizontal gas flow and vertical tubes
- Circulation due to gravity
- For gas turbines less than 50 MW, evaporator/drum can be shipped to site in single piece
- For larger gas turbines the evaporator/drum is shipped in multiple sections

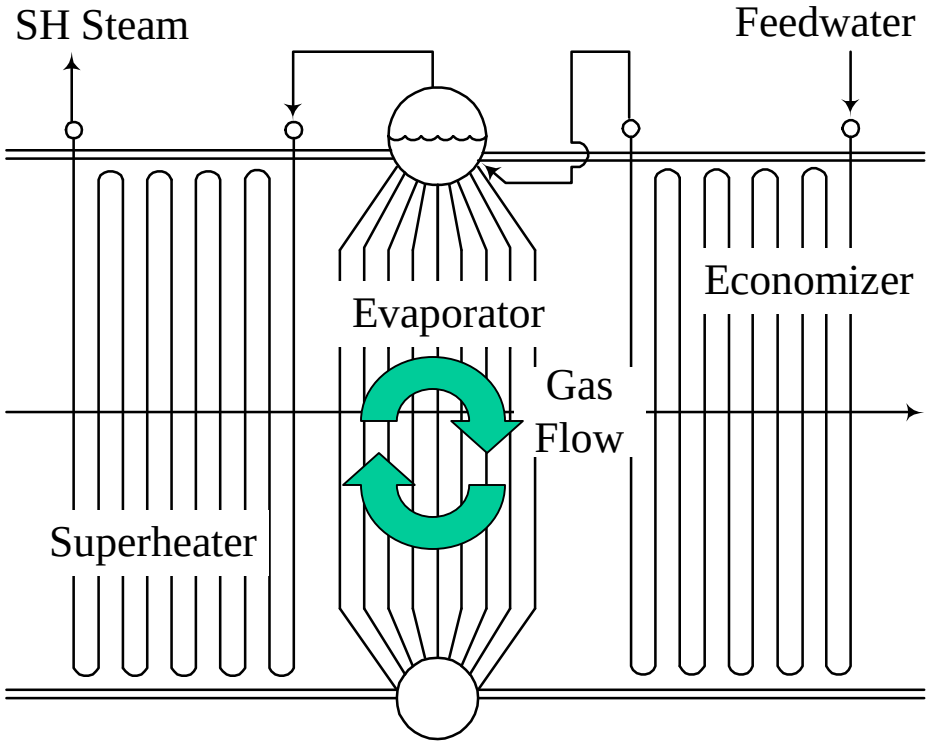

FORCED CIRCULATION HRSG

- Typically vertical gas flow and horizontal tubes
- Historically common in Europe due to small footprint
- Steam/water mixture circulation through evaporator tubes and to/from drum with a pump
- Some units only require circulation pumps for startup

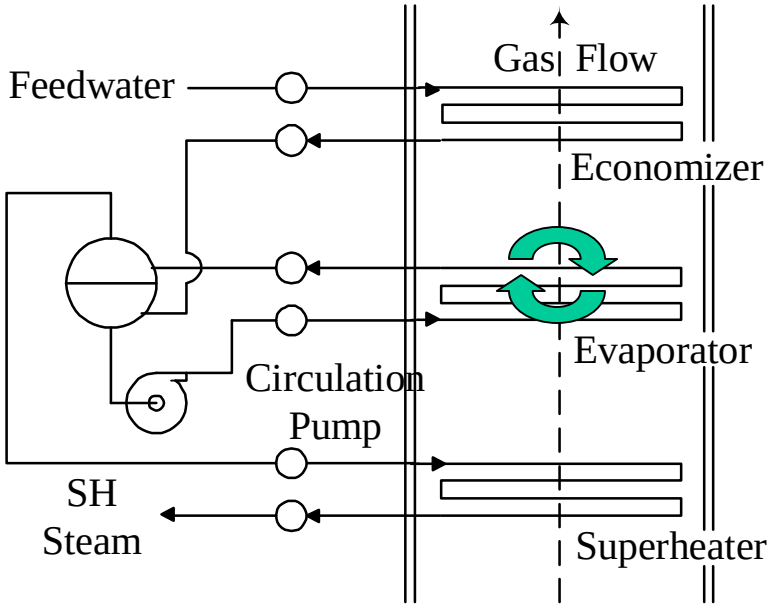

ONCE THROUGH HRSG (OTSG)

- Typically vertical gas flow and horizontal tubes
- OTSGs eliminate the need for steam drums (no circulation)
- Phase change from water to steam is free to move throughout the bundle
- Water solids removed prior to entry into feedwater header

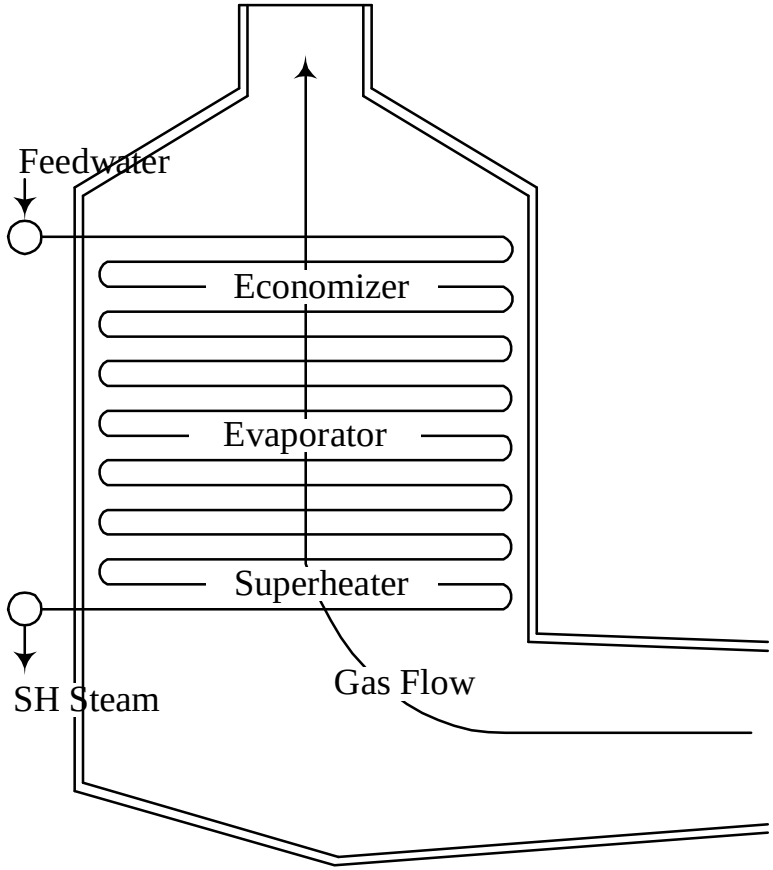

SINGLE VS MULTIPLE PRESSRE HRSG

- Adding additional pressure levels in the HRSG can increase the efficiency of the HRSG (reducing the stack temperature)
- As the saturation temperatures are lower at successive pressures, the stack temperature can be lowered

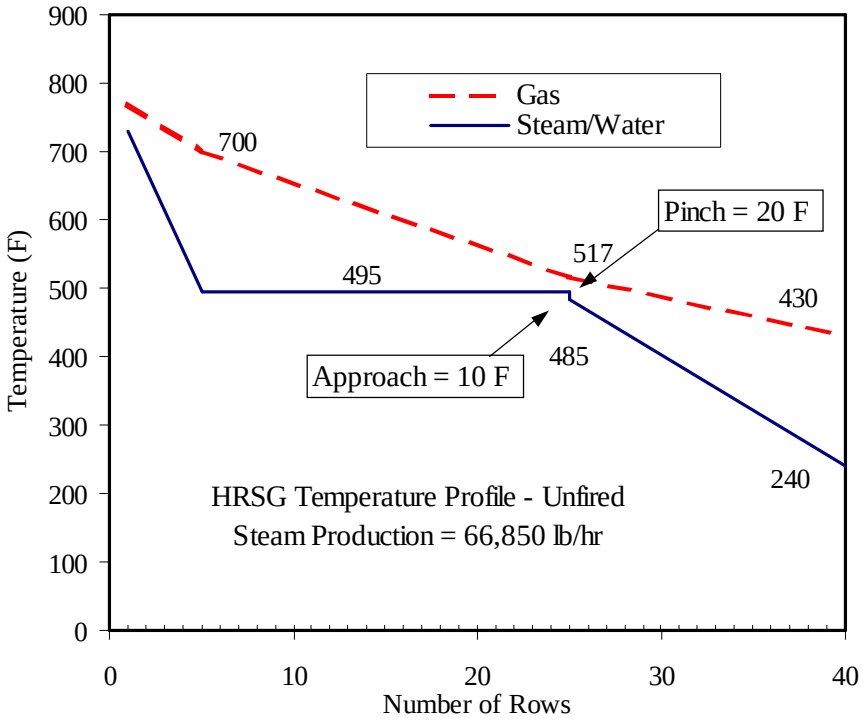

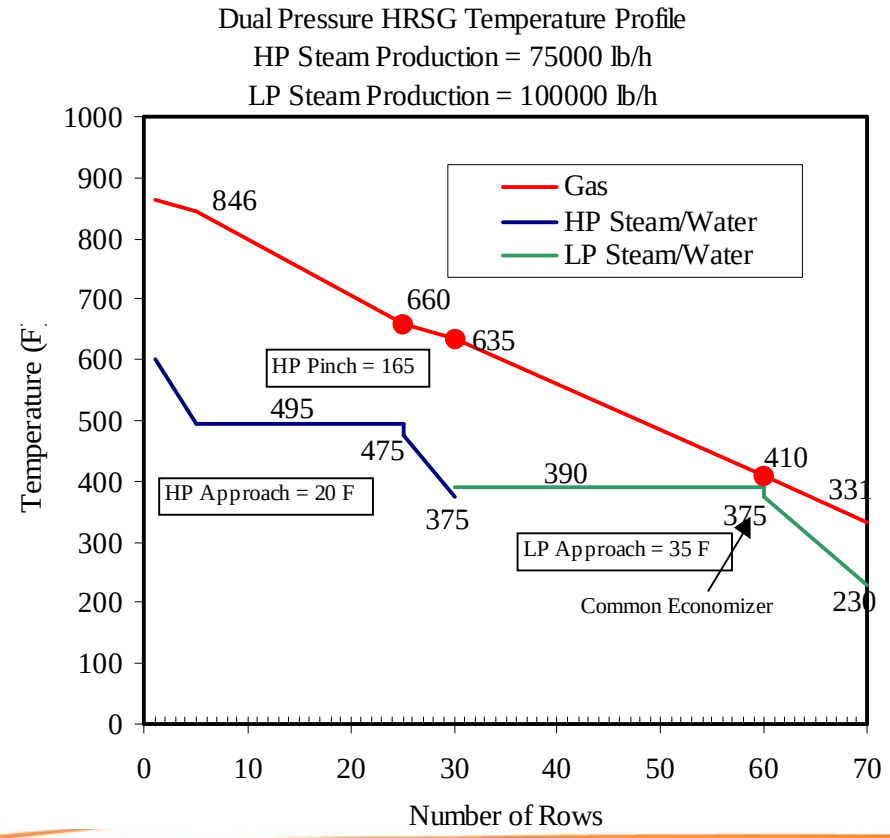

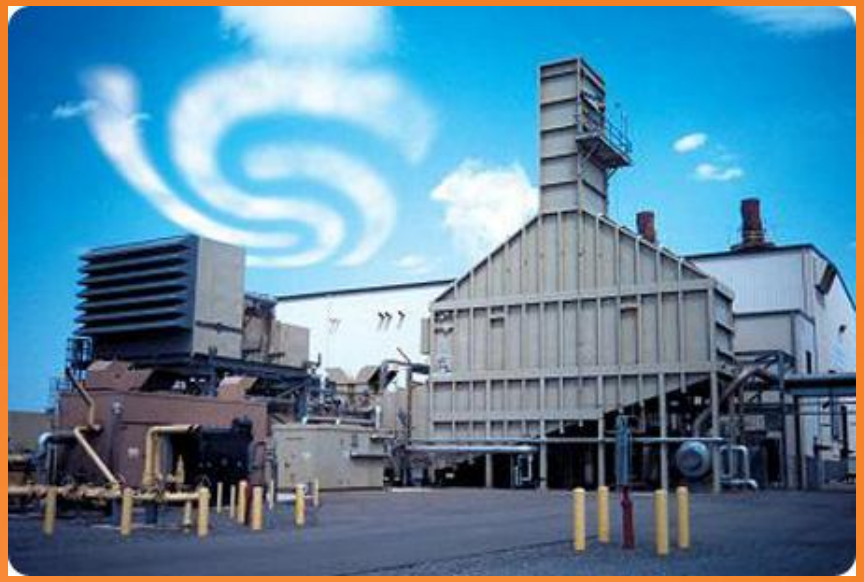

simply generates more profit

once
through
steam
generators

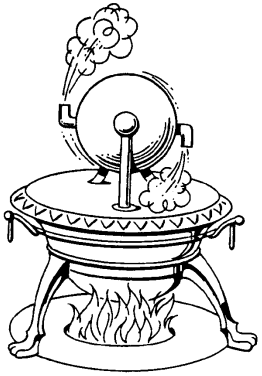

Hero's Turbine

IAGT 2010
FALL COURSE

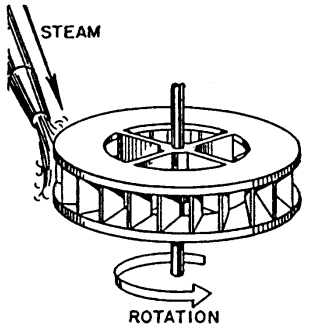

Branca's Turbine

Day 1 – Session 1

Introduction to Gas Turbines, Cogeneration and Combined Cycle Applications

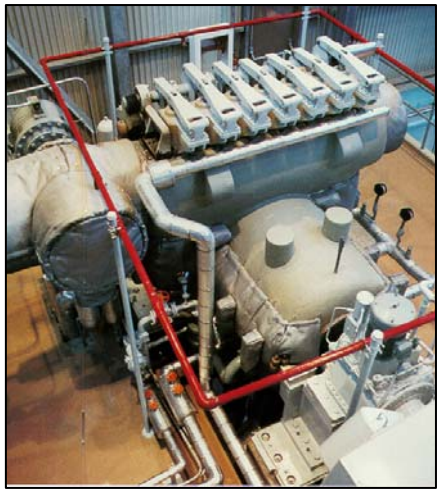

Steam Turbines

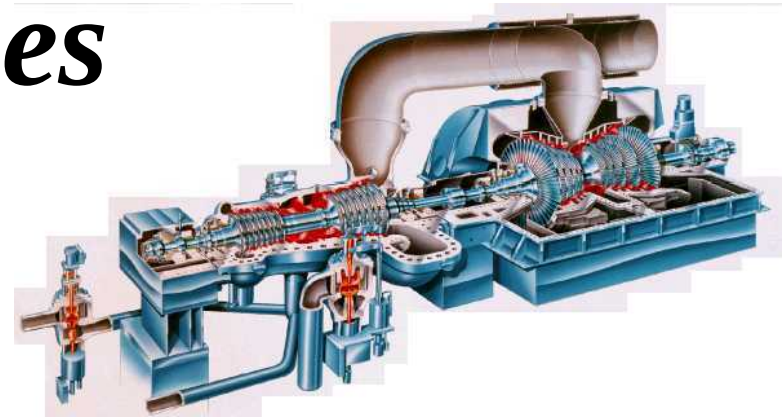

Gryphon International Engineering Services Inc.
www.gryphoneng.com

IAGT Committee
www.iagtcommittee.com

Steam Turbines and Condensers ©

An introduction to the application of steam turbine generators and condensing systems to combined-cycle power plants. Typical applications included.

The Basics of Steam

Steam behaviour is complex.

Change one property, i.e. pressure, volume, temperature, energy or moisture, then all other properties change.

Mollier Diagram

Shows the interrelationship of steam properties

Vertical Axis:
Enthalpy (H) – the internal energy (btu/lb)

Horizontal Axis:
Entropy (S) – irrecoverable energy in fluid (btu/lb.F)

Lines of:

- Constant pressure
- Constant temperature
- Constant moisture
- Steam saturation line
- Constant superheat

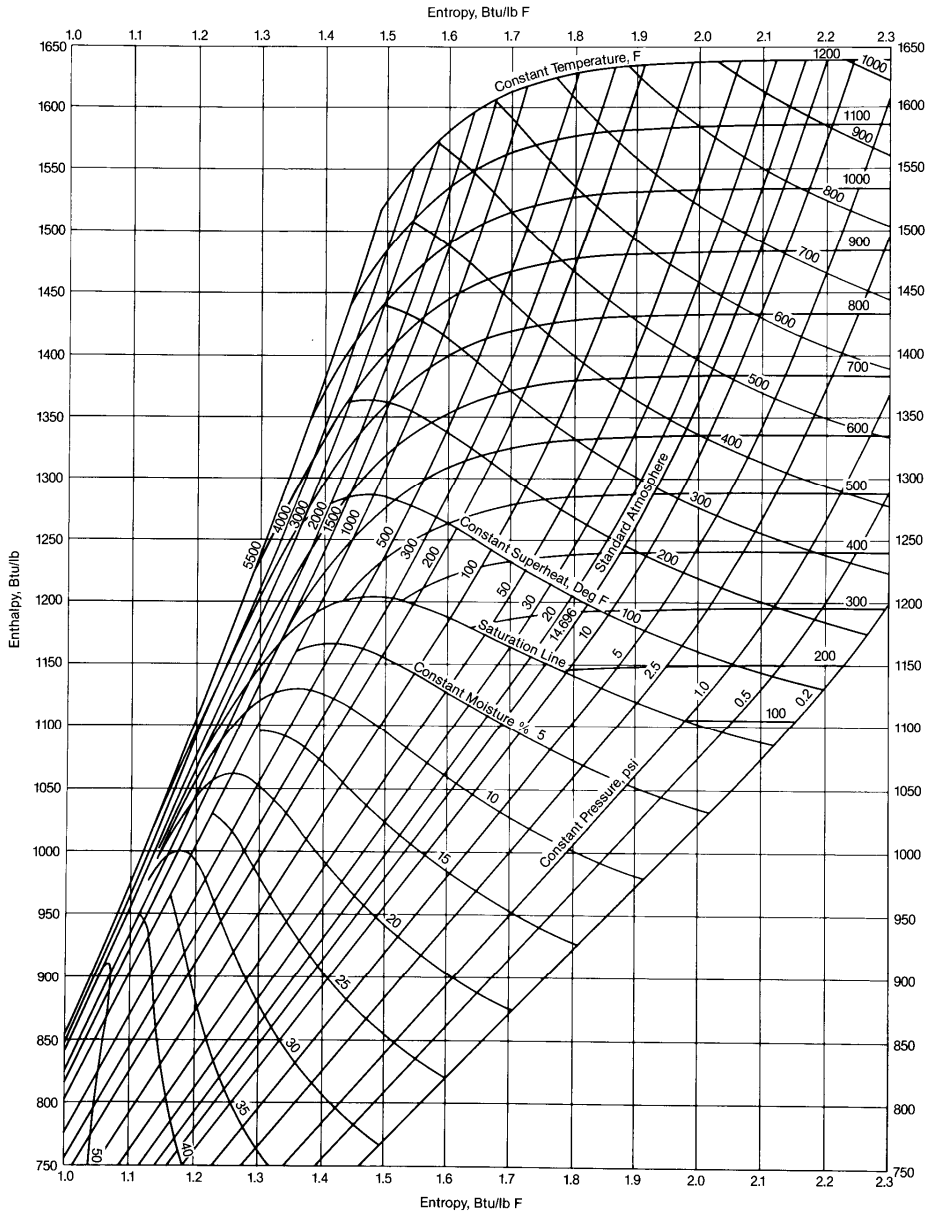

STEAM TURBINE EXHAUST CONFIGURATIONS

Backpressure Steam Turbines

- generally exhaust to a steam system above atmospheric pressure
- volume of steam is relatively small
- blade path consists of relatively small nozzles, blades, and cylinders
- exhaust piping relatively small

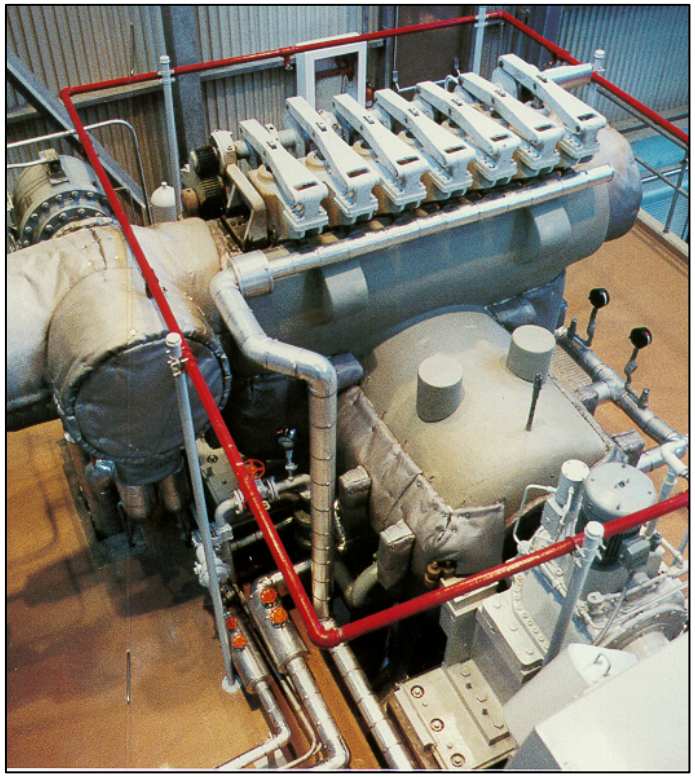

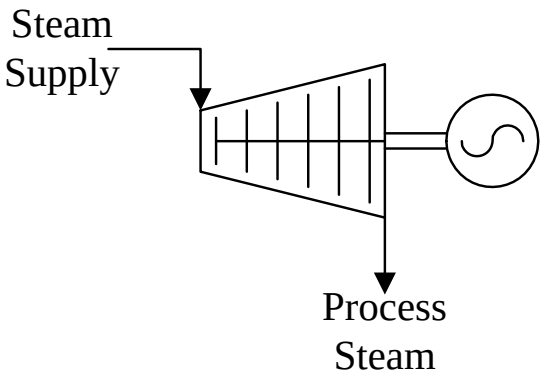

Any inlet-to-exhaust pressure ratio > 2:1 acceptable

Exhaust pressures above 200 psig rare

Turbine capacity only limited by process steam amount needed

However, backpressure STGs > 50 MW relatively rare

Rarely used in combined-cycle configuration.

Steam Turbines and Condensers ©

Condensing Steam Turbines

- generally exhaust to system / location significantly below atmospheric pressure (inches of mercury absolute, i.e. inch HgA)
- specific volume of steam very high
- much larger blading and nozzle areas required
- cylinders become very large near the exhaust of the unit
- exhaust hood / diffuser after the last stage blades – slows down steam in an orderly manner, to minimize exhaust losses

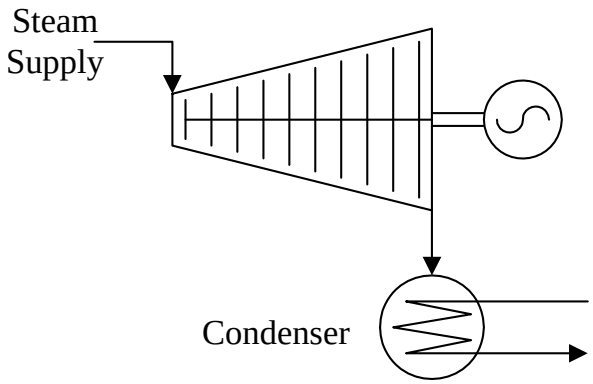

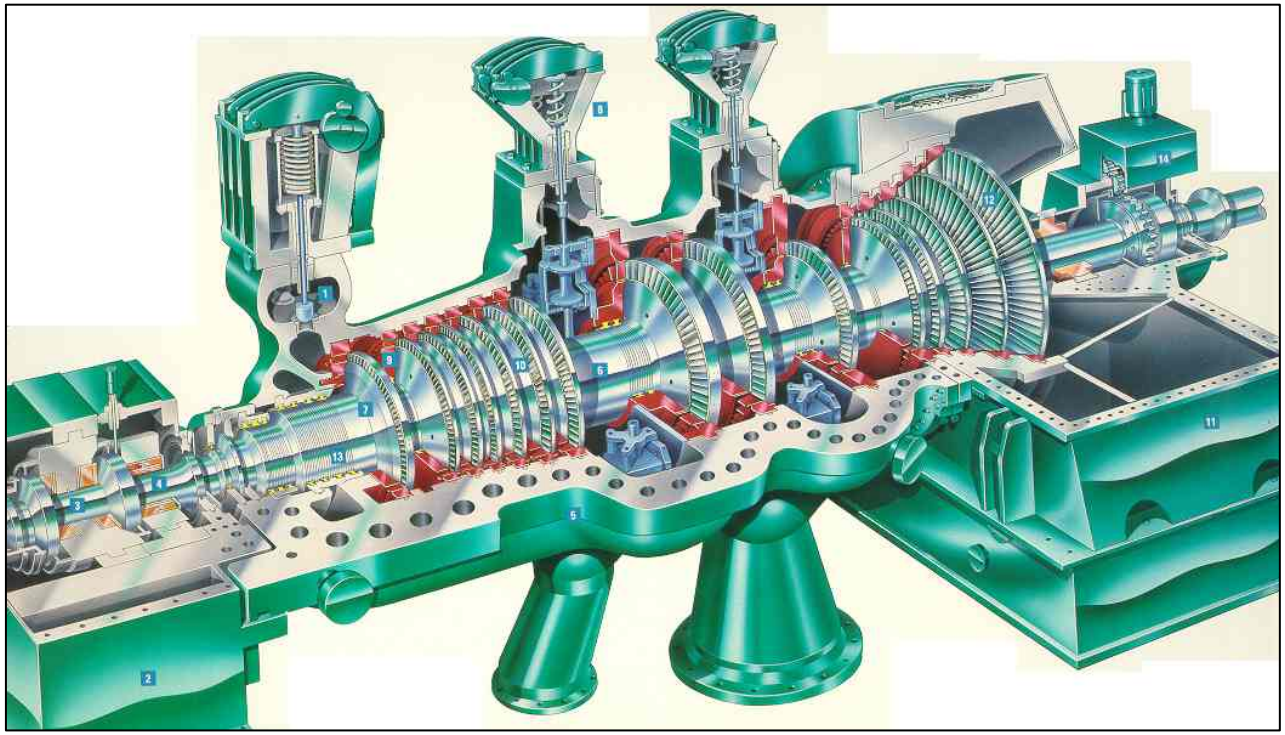

Condensing refers to the condensing system attached to unit – which acts to condense or turn back to water (condensate) the exhaust steam

Steam volume decreases by orders of magnitude – steady-state vacuum created / maintained in "closed vessel"

Sized from as small as ~5 MW, up to the 1500 MW+ units employed in utility service. **Combined-cycle plants**: maximum size 200~250 MW.

Inlet pressure: up to 2400 psig

Maximum inlet temperatures 900~1050 F

Condensing pressures: 0.75 inch HgA for coldest condensing systems - up to maximum of ~10 inch HgA for air-cooled condensing systems @ high ambients

Steam Turbines and Condensers ©

Comparison

Each of condensing & backpressure turbine:

- receives the same 250,000 lb/hr of 900 psig, 900 deg F steam
- is expanded to 60 psig in backpressure unit
- or expanded to 1.5 inch HgA in condensing unit.

Backpressure Steam Turbine:

- 16 MW
- useful 60 psig process steam @ ~ 405 deg F

Condensing Steam Turbine:

- 33 MW
- no process steam
- condensate (hotwell) ~92 F (usually to deaerator)

Push for increasing efficiencies – developers are seeking to take advantage of this low-grade, high-volume heat for other useful processes

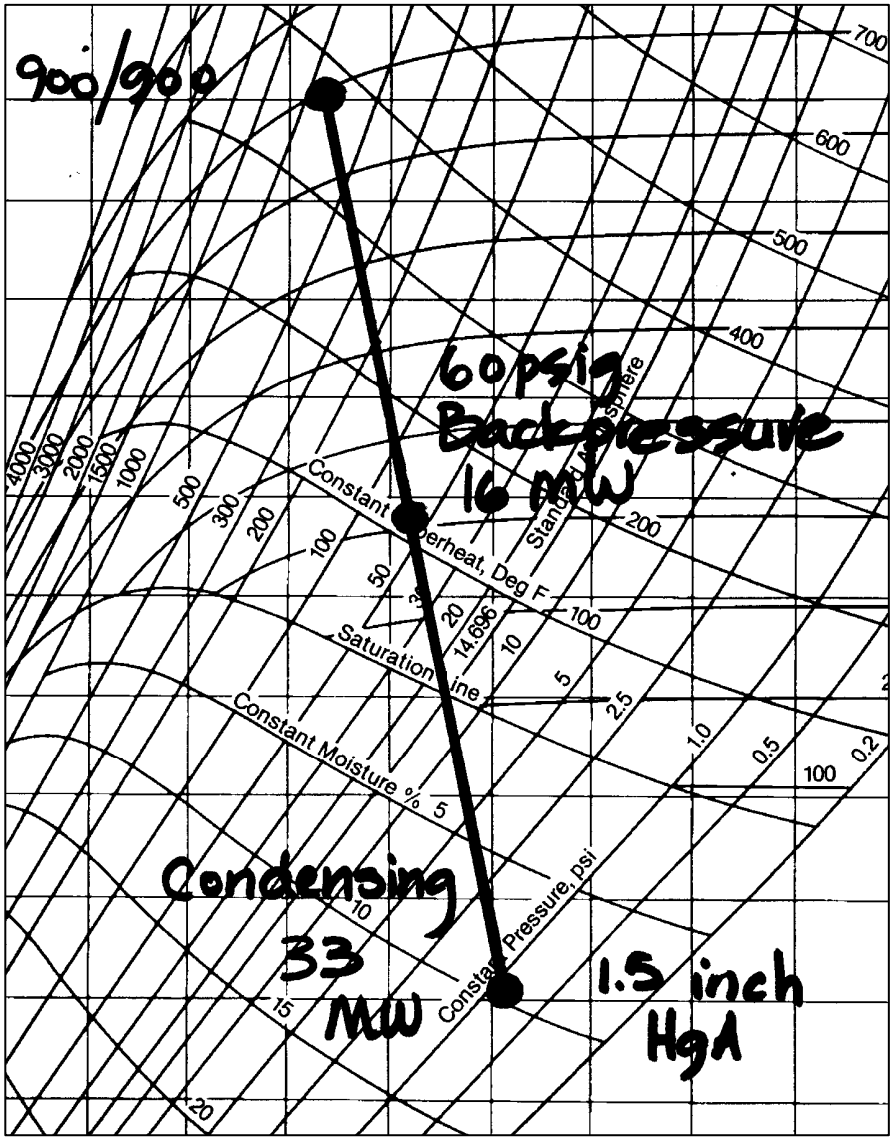

EXTRACTION, ADMISSION and REHEAT CONSIDERATIONS

Extraction Steam Turbines

- Tapping point somewhere in blade path
- Steam at intermediate pressure obtained
- Extractions can be either automatic (controlled), or uncontrolled pressure

TWO EXTRACTION TYPES – applicable to either backpressure or condensing:

Controlled Extraction:

- Poppet, spool or grid valves installed at intermediate steam chest
- Valve position manipulated by the control system to maintain pressure

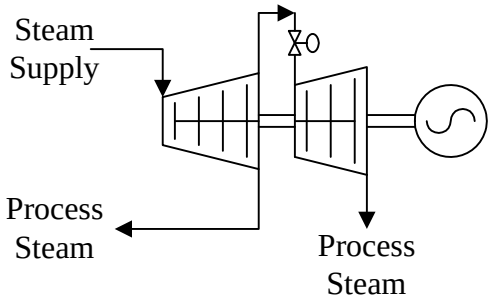

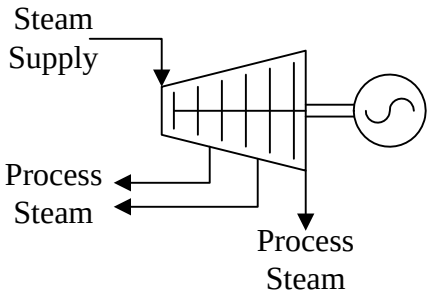

Uncontrolled Extraction:

- No controlling valves at the tap-off point
- Delivery pressure function of steam flow downstream of tap-off point

Admission Steam Turbines

Admission steam turbines:

- Similar to extraction units – either **controlled** or **uncontrolled**
- Requires trip & throttle valve – for turbine trips

Some STG units configured as admission / extraction – i.e. can accept or deliver steam.

Steam Turbines and Condensers ©

Reheat Steam Turbines

- Special condensing turbine configuration
- Common for large non-nuclear (fossil) utility units for decades
- Becoming common for largest combined-cycle plants - where inlet pressures & temperatures rising

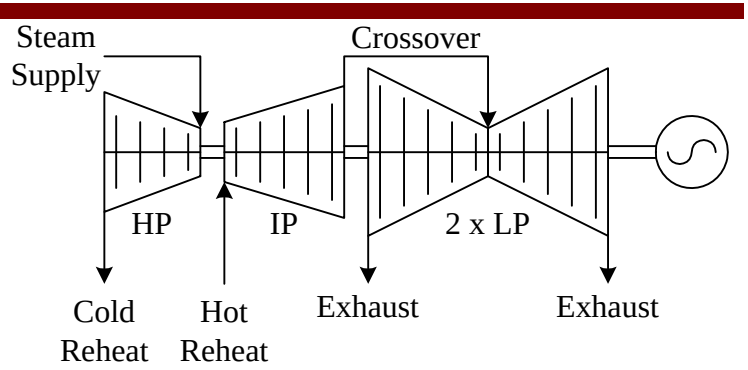

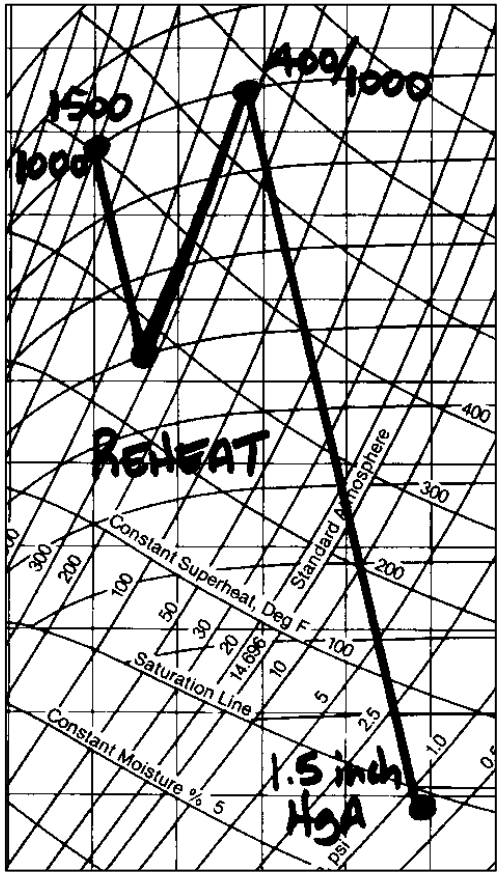

Steam expanded through HP turbine – taken as cold-reheat to HRSG reheat section – reheated back to original inlet steam temperature – admitted back to intermediate-pressure turbine section as hot reheat

- improves back end wetness
- increased power & efficiency
- multi-cylinder configurations
- additional reheat & intercept valves required
- Inlet / reheat temperatures 1000~1050 F
- Initial pressures: 1250 ~ 2400 psig
- Reheat pressures: 400 ~ 600 psig.
- + $$ cost

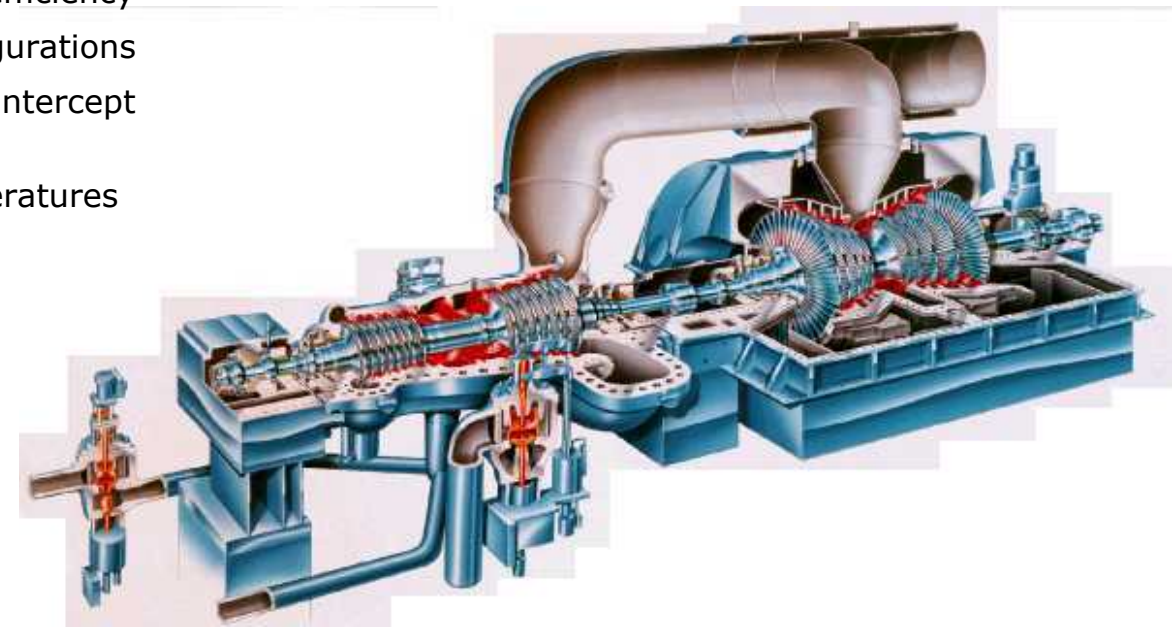

Steam Turbines and Condensers ©

TYPES OF CONDENSING SYSTEMS

- Water-cooled surface condensers and wet condensing systems
- Air-cooled condensers
- Alternative condensing systems

Water-Cooled Surface Condensers

Most efficient - most popular condensing systems – where environmental permits

Large amount of cooling water required.

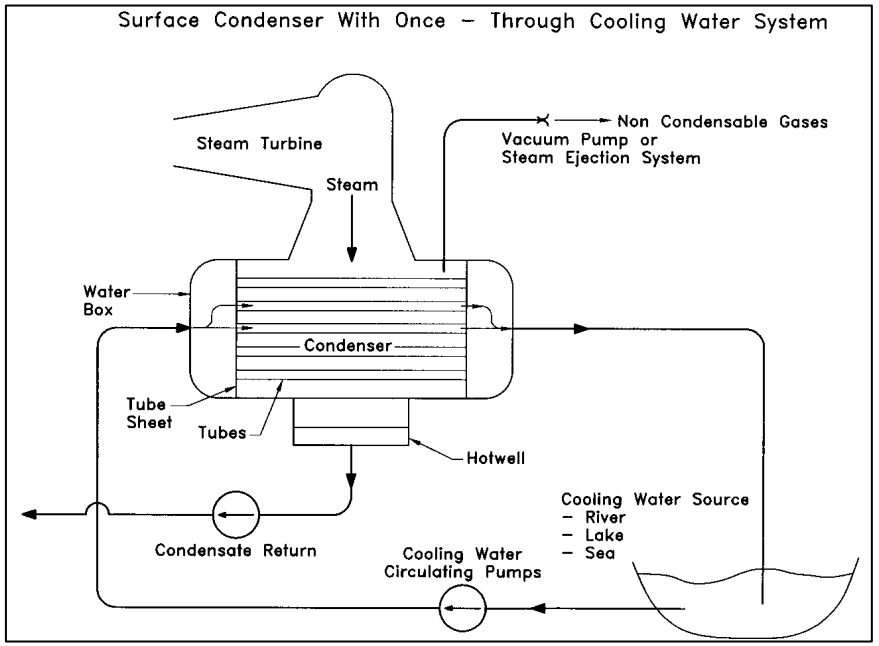

2 MAJOR TYPES

Surface Condensers with Once-Through Cooling Water Systems

- Simplest
- Best performance
- Requires river, lake or sea and pumphouse
- Generally restricted to <=18 deg F rise

Steam Turbines and Condensers ©

Surface Condensers with Evaporative Cooling Towers:

- Eliminates hot water discharge back to original water source
- Closed-circuit system for condenser cooling water
- Circulating water obtained from the basin of cooling tower, heated in condenser circuit, returned to tower
- Makeup water required – from evaporation, drift & blowdown
- Blowdown treatment & chemical injection required
- May require plume abatement

2 MAJOR TYPES

Natural-draft cooling towers:

- Distinctive hyperbolic shape.
- Cooling air flow induced naturally by the hotter (less dense) air in the tower drawing colder (denser) air from outside, at the bottom.

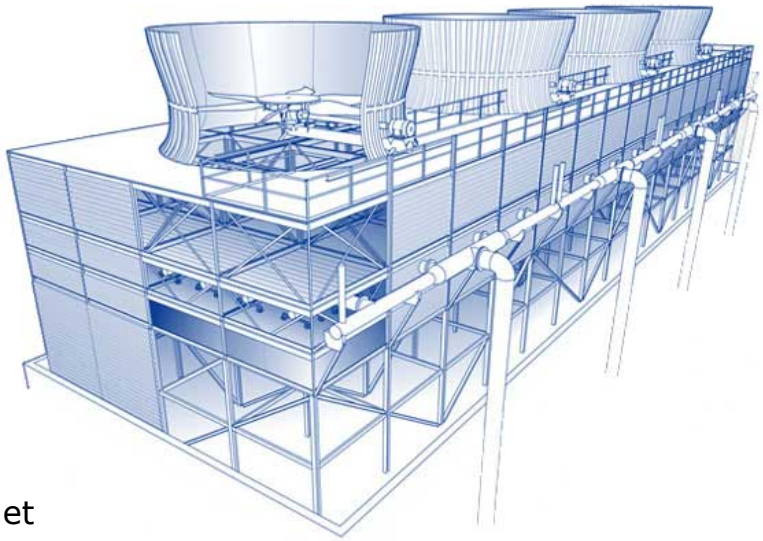

Mechanical-draft cooling towers:

Create airflow through tower by either:

- Induced-draft (fan at top)
- Forced-draft fans (located at the air inlet to the tower, susceptible to icing).

Steam Turbines and Condensers ©

Dry or Direct Air-Cooled Condensers (ACC)

- Where water is scarce
- Where powerplant can't afford even small amounts of cooling water evaporation (i.e. no cooling tower)

Steam turbine exhaust steam enters central plenum/pipe

A-Frame: finned tubes sloped down towards condensate collection system

Variable or dual-speed cooling fans

Steam condenses as it progresses toward the hotwell.

Performance dependent on dry bulb temperature

Concerns:

- Cold weather operation
- Icing

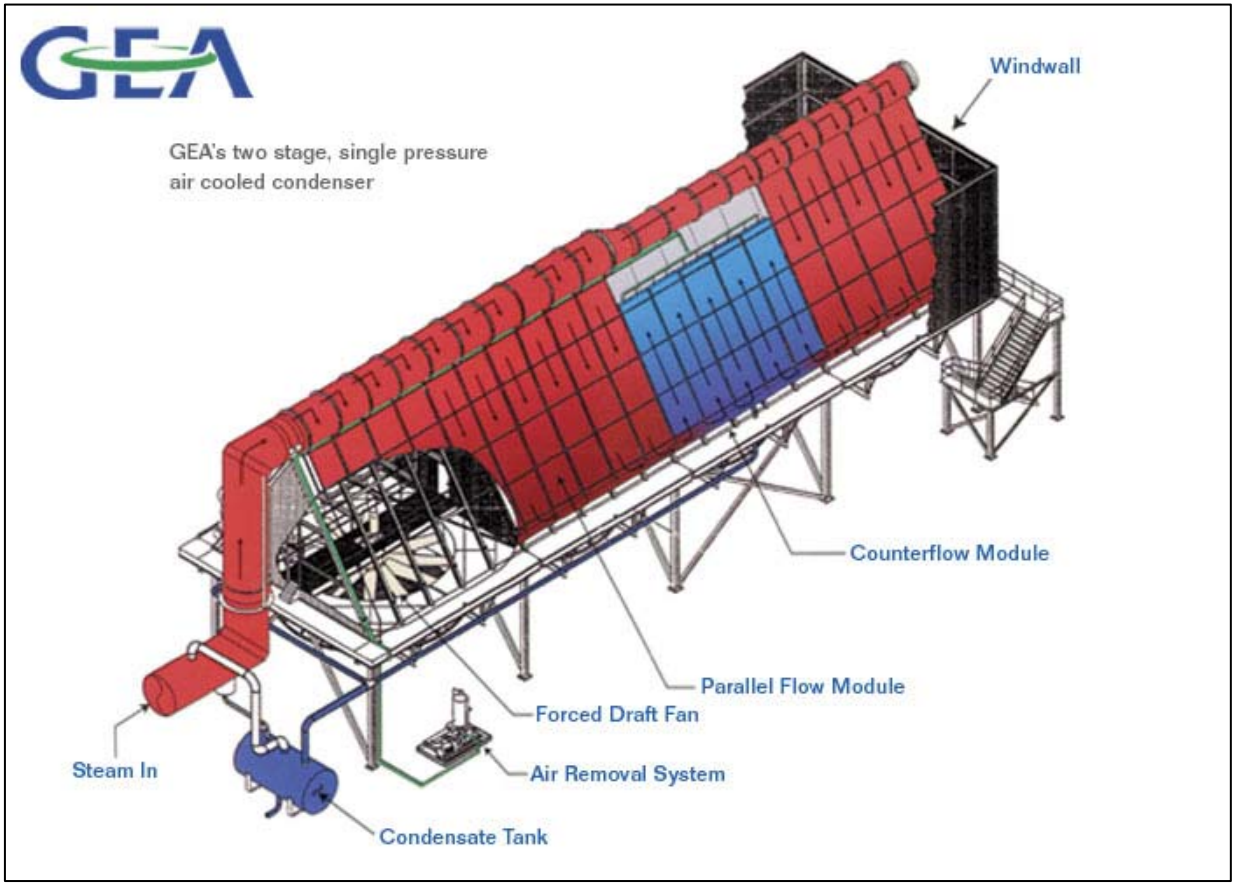

Alternative Condenser Systems

- Parallel / hybrid condensing – combo of direct air-cooled condenser + surface condenser & cooling tower.
- Wet-surface air-cooled condensers (WETSAC).
- Cooling Ponds: 1~2 acres of water surface area required – per MW of condensing.

Steam Turbines and Condensers ©

Condenser Performance Comparison

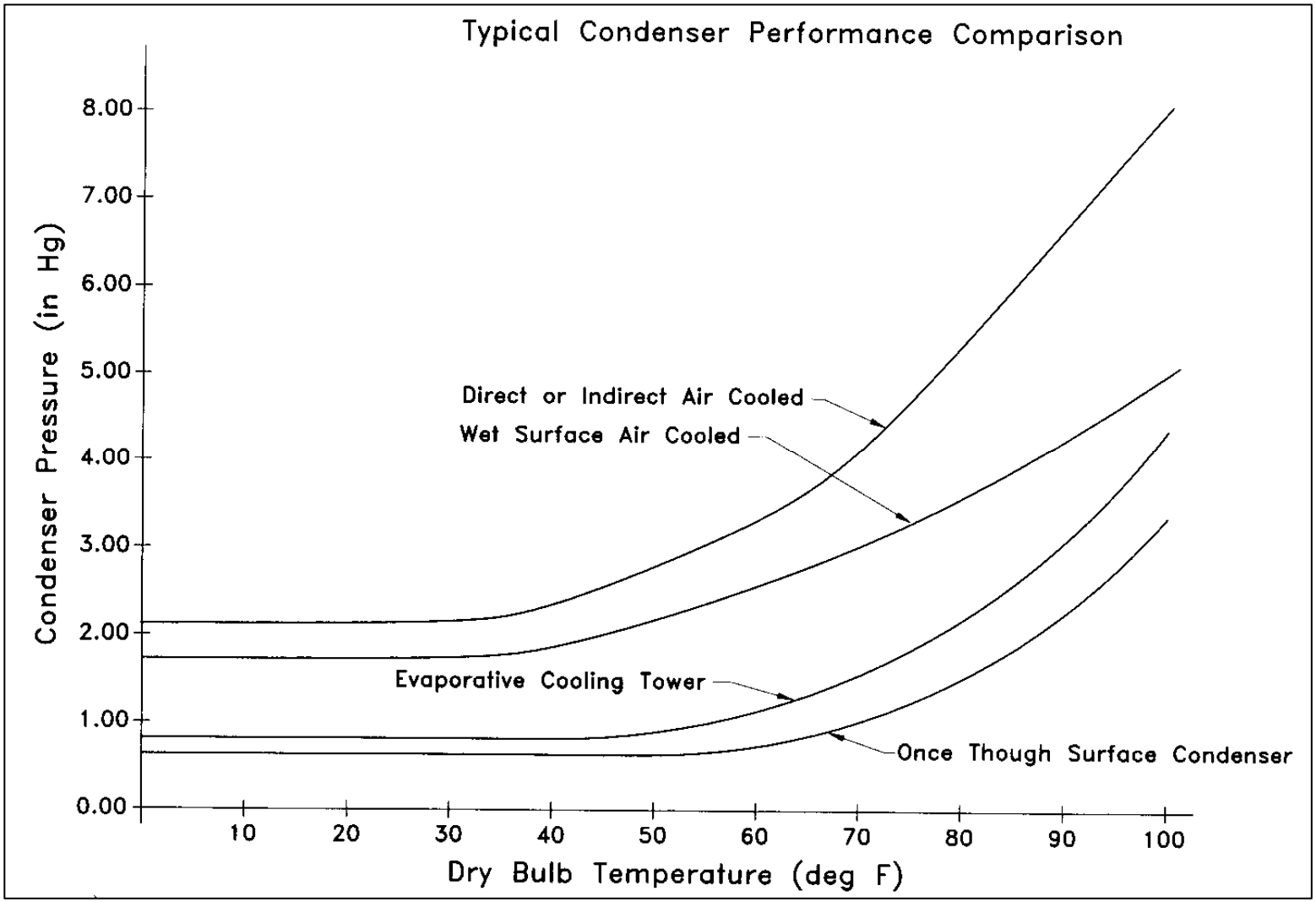

IAGT 2010
FALL COURSE

Day 1 – Session 1

Introduction to Gas Turbines, Cogeneration and Combined Cycle Applications

Cogeneration and Combined-Cycle

Gryphon International Engineering Services Inc.
www.gryphoneng.com

IAGT Committee
www.iagtcommittee.com

COGENERATION DEFINITION

"The simultaneous production of two or more forms of useful energy (usually electricity and heat) from a single fuel source"

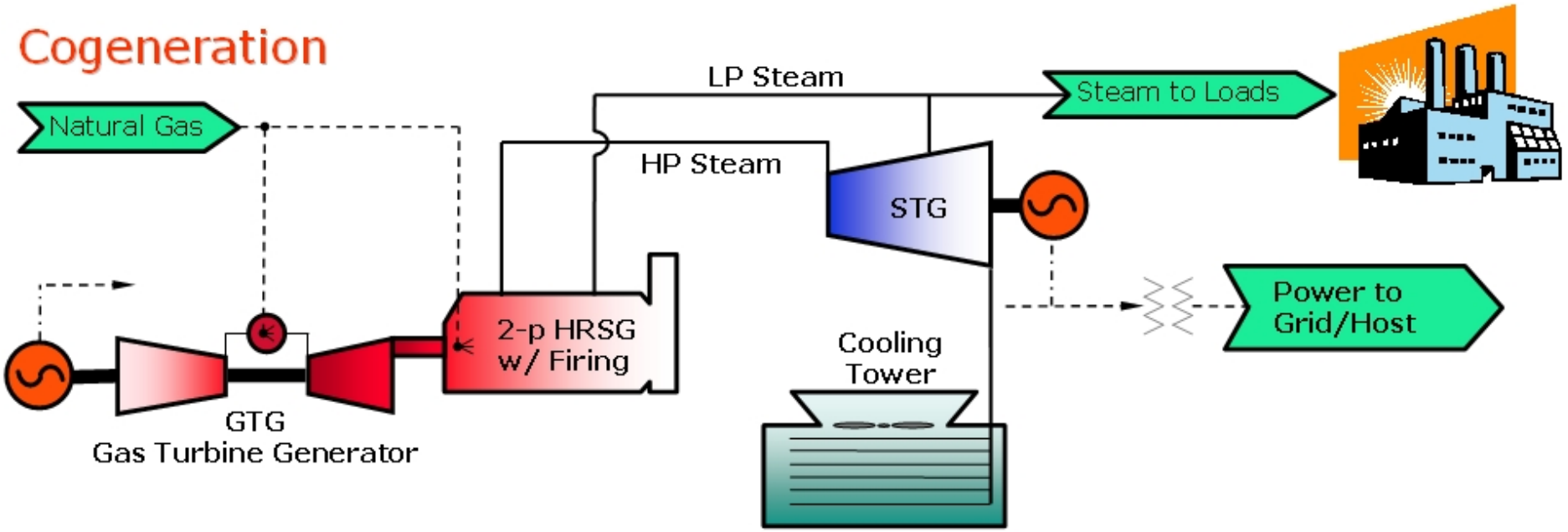

MAJOR EQUIPMENT

usually associated with Cogeneration / CHP cycles

- Steam generator or boiler
- Steam turbine generator (STG)
- Gas turbine generator (GTG)
- Heat recovery steam generator (HRSG)
- Reciprocating Gas, Dual-Fuel or Diesel engine generator

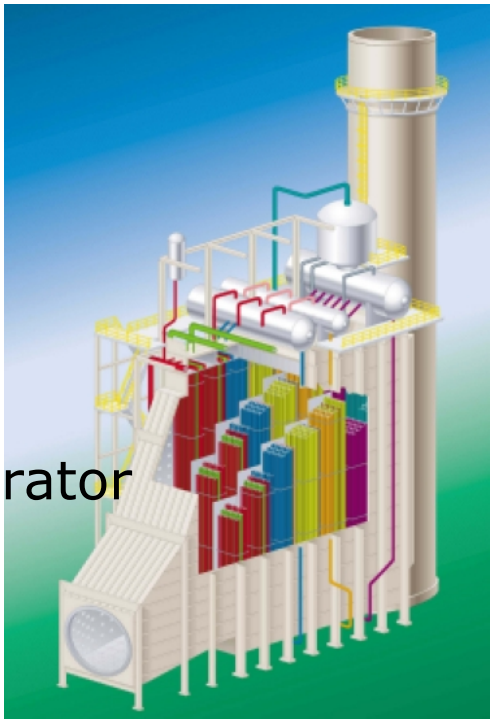

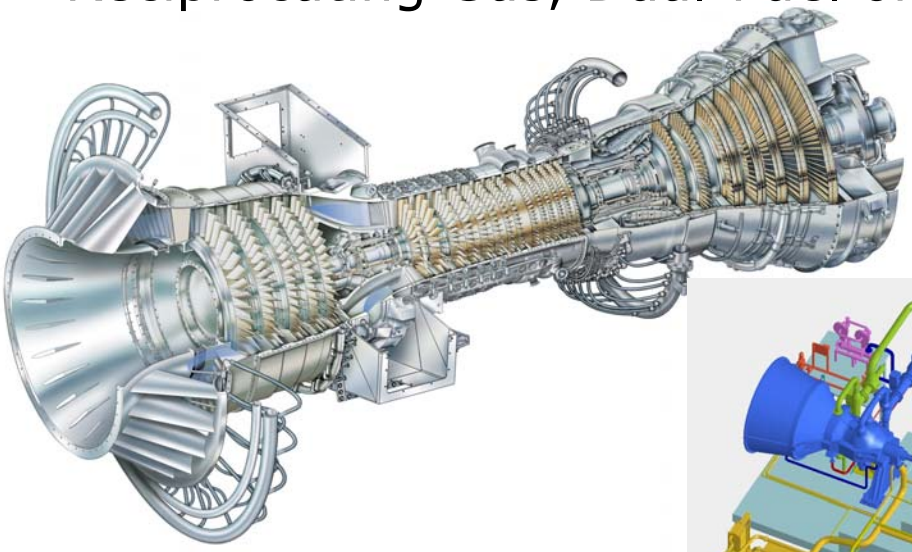

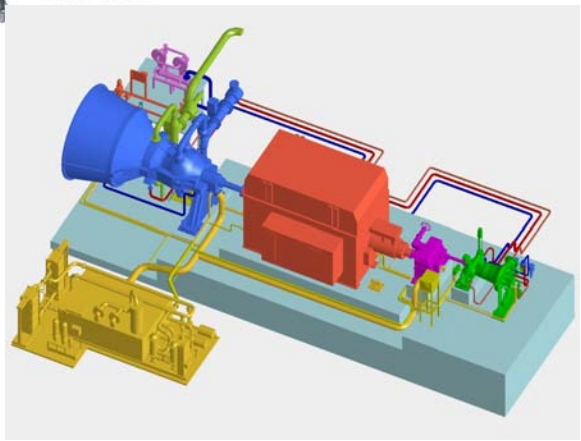

COGENERATION EXAMPLE

Existing – Base Case

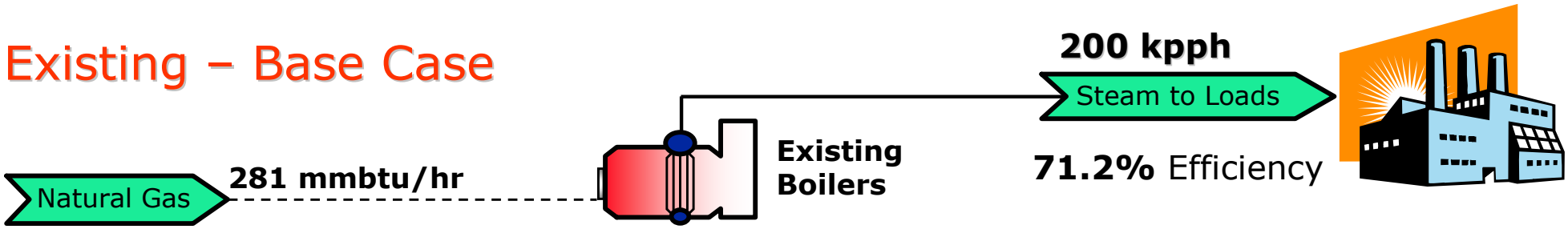

Cogeneration Case

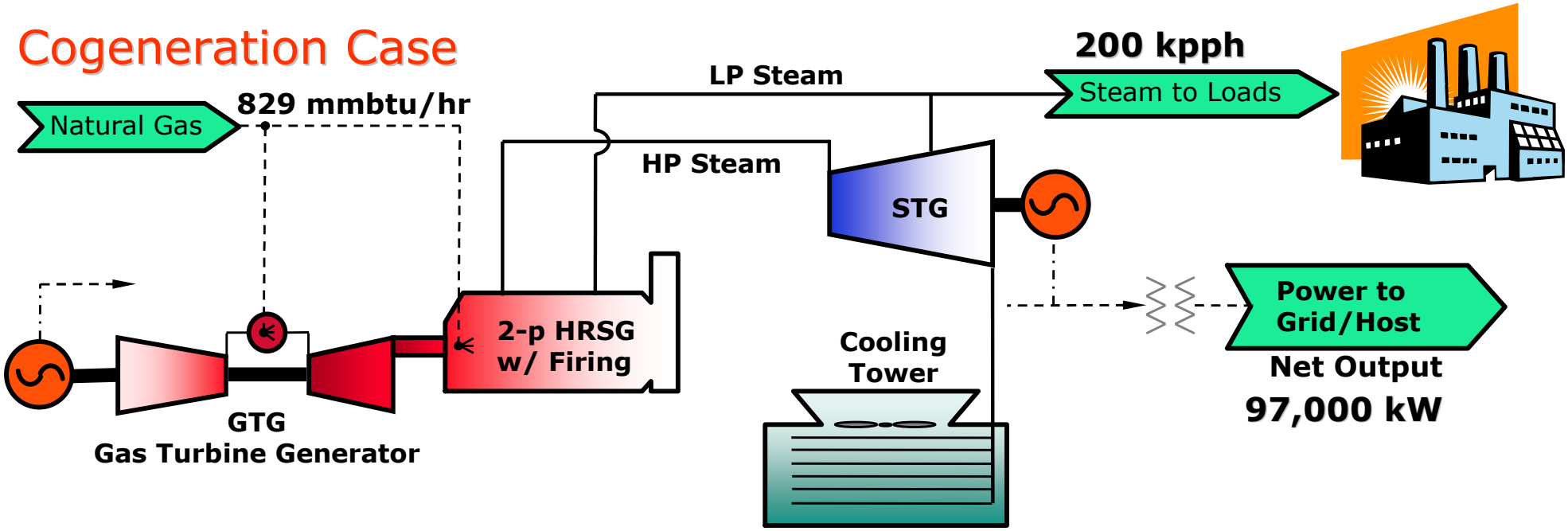

Cogeneration or CHP Heat Rate
5328 btu/kW.hr
64% Efficiency

FCP Heat Rate
5650 btu/kW.hr
60.4% Efficiency

FUEL → ELECTRICITY → PROCESS HEAT

A. STEAM GENERATOR/STEAM TURBINE

THERMAL EFFICIENCY = 65 + 15 = 80%
HEAT TO POWER RATIO = 65/15 = 4.3

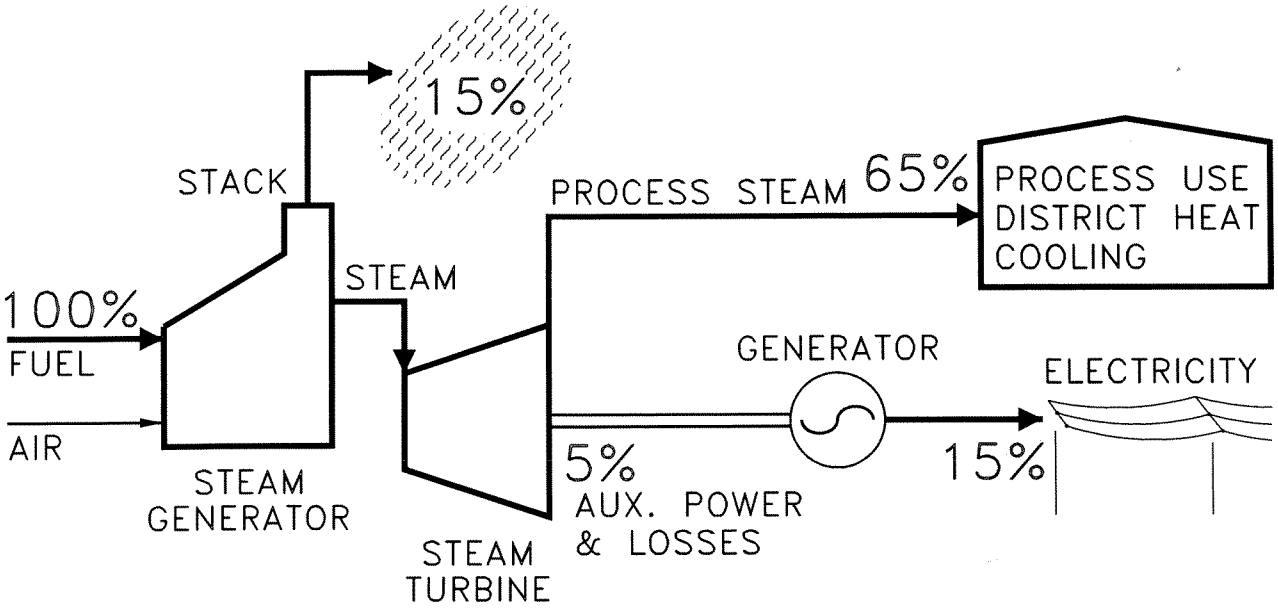

B. GAS TURBINE/HRSG

THERMAL EFFICIENCY = 50 + 28 = 78%
HEAT TO POWER RATIO = 50/28 = 1.8

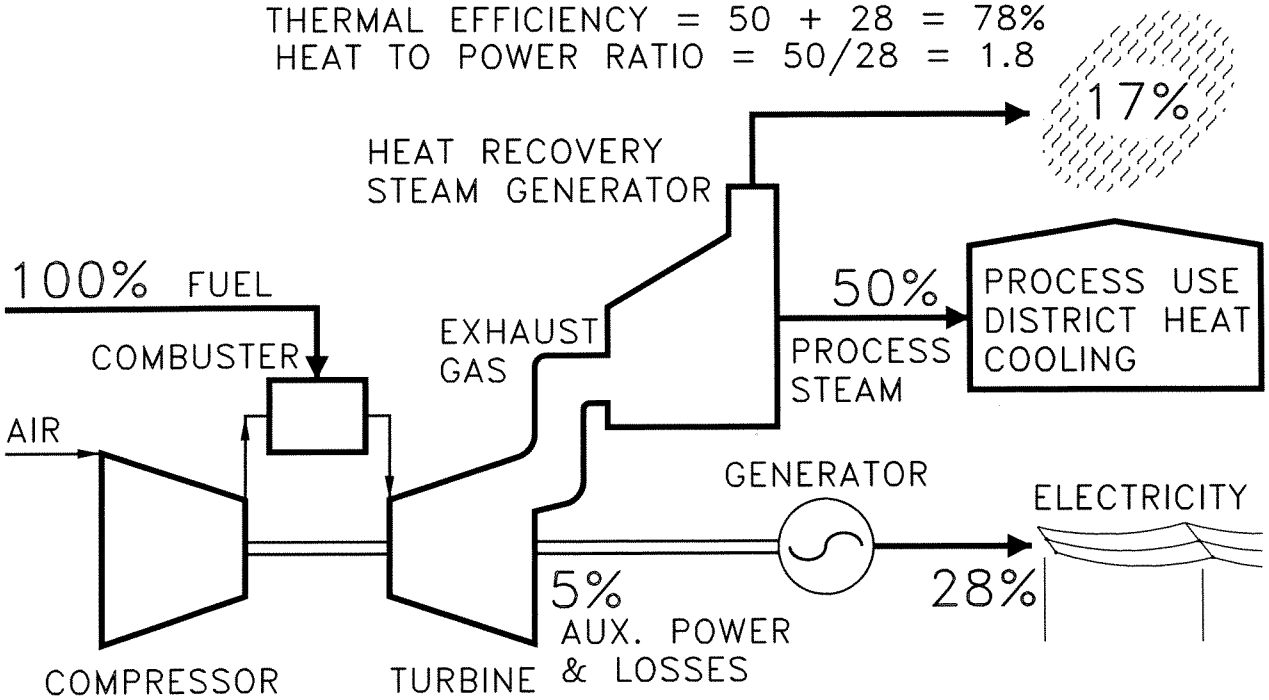

ALL EFFICIENCIES ARE HHV

GRYPHON
INTERNATIONAL ENGINEERING SERVICES INC.

TOPPING CYCLES

JAN. 2000

COGENERATION PRINCIPLES
EXHIBIT 1

FUEL → PROCESS HEAT → ELECTRICITY

HRSG/STEAM TURBINE

THERMAL EFFICIENCY = 50 + 11 = 61%
HEAT TO POWER RATIO = 50/11 = 4.5

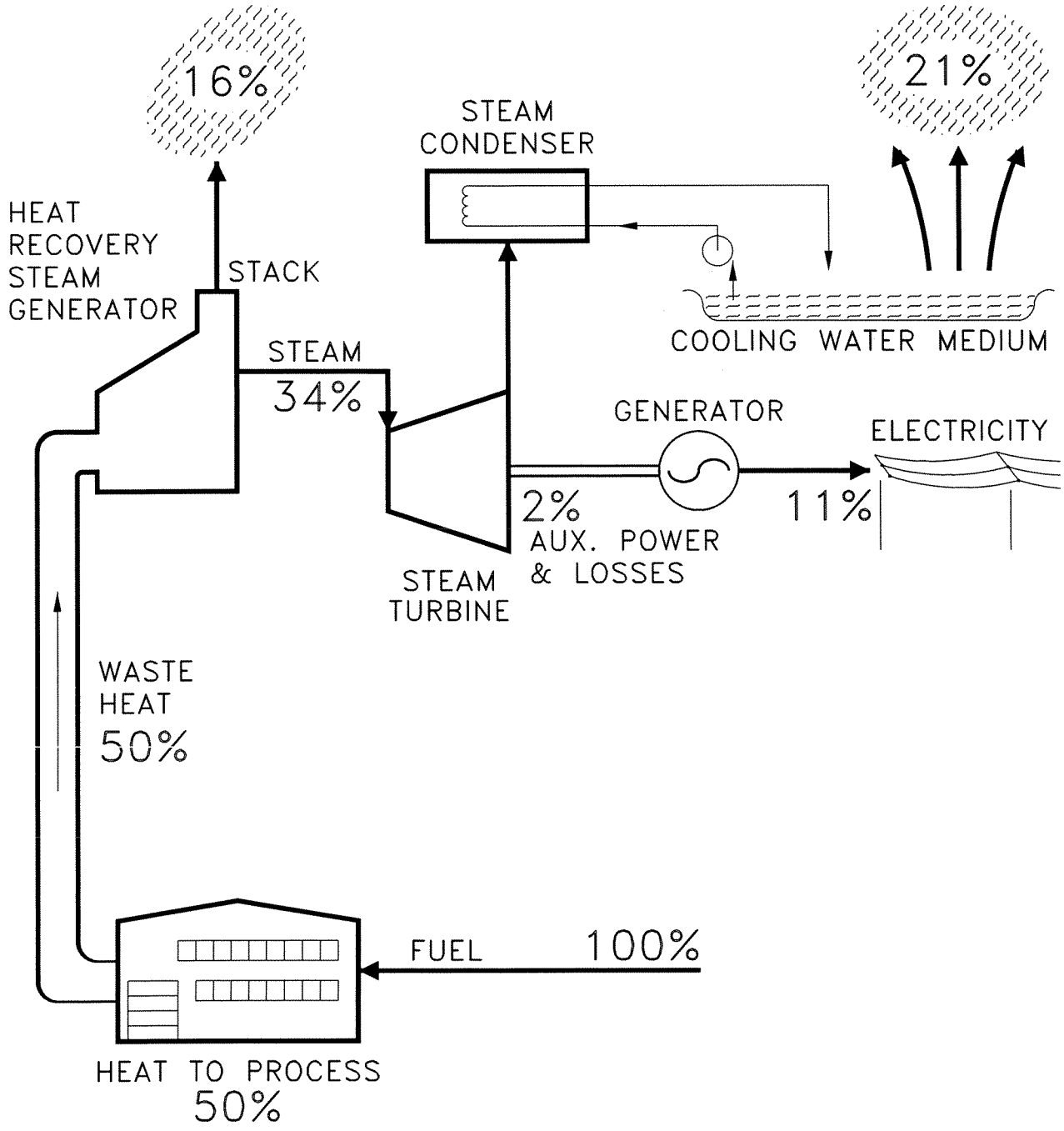

ALL EFFICIENCIES ARE HHV

GRYPHON
INTERNATIONAL ENGINEERING SERVICES INC.

BOTTOMING CYCLE

JAN. 2000

COGENERATION PRINCIPLES
EXHIBIT 2

FUEL → ELECTRICITY → PROCESS → ELECTRICITY

GAS TURBINE/HRSG/STEAM TURBINE

THERMAL EFFICIENCY = 28 + 15 +14 = 57%
HEAT TO POWER RATIO = 15/(28 + 14) = 0.36

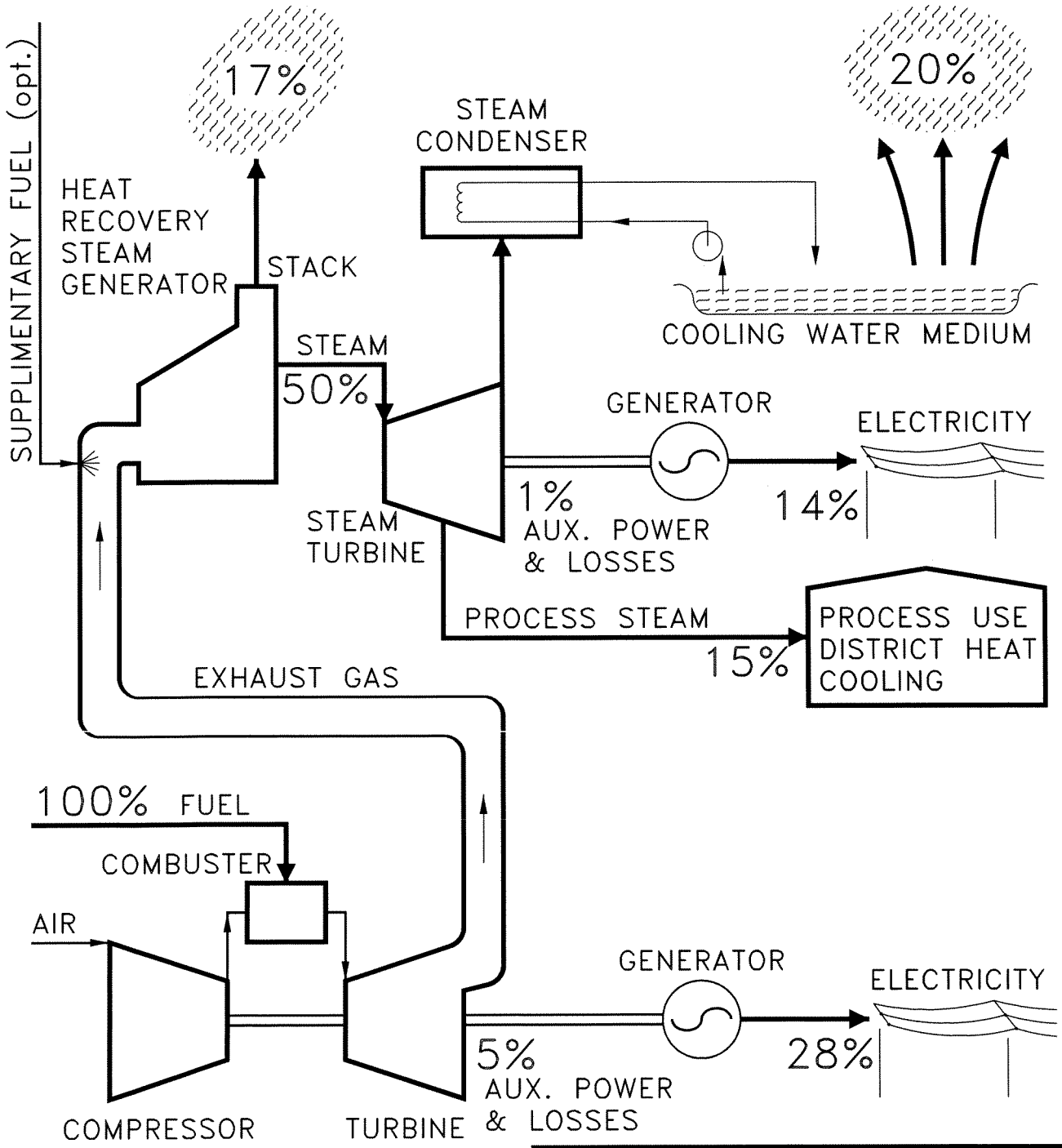

GRYPHON
INTERNATIONAL ENGINEERING SERVICES INC.

COMBINED CYCLE COGENERATION

ALL EFFICIENCIES ARE HHV

JAN. 2000

COGENERATION PRINCIPLES
EXHIBIT 3

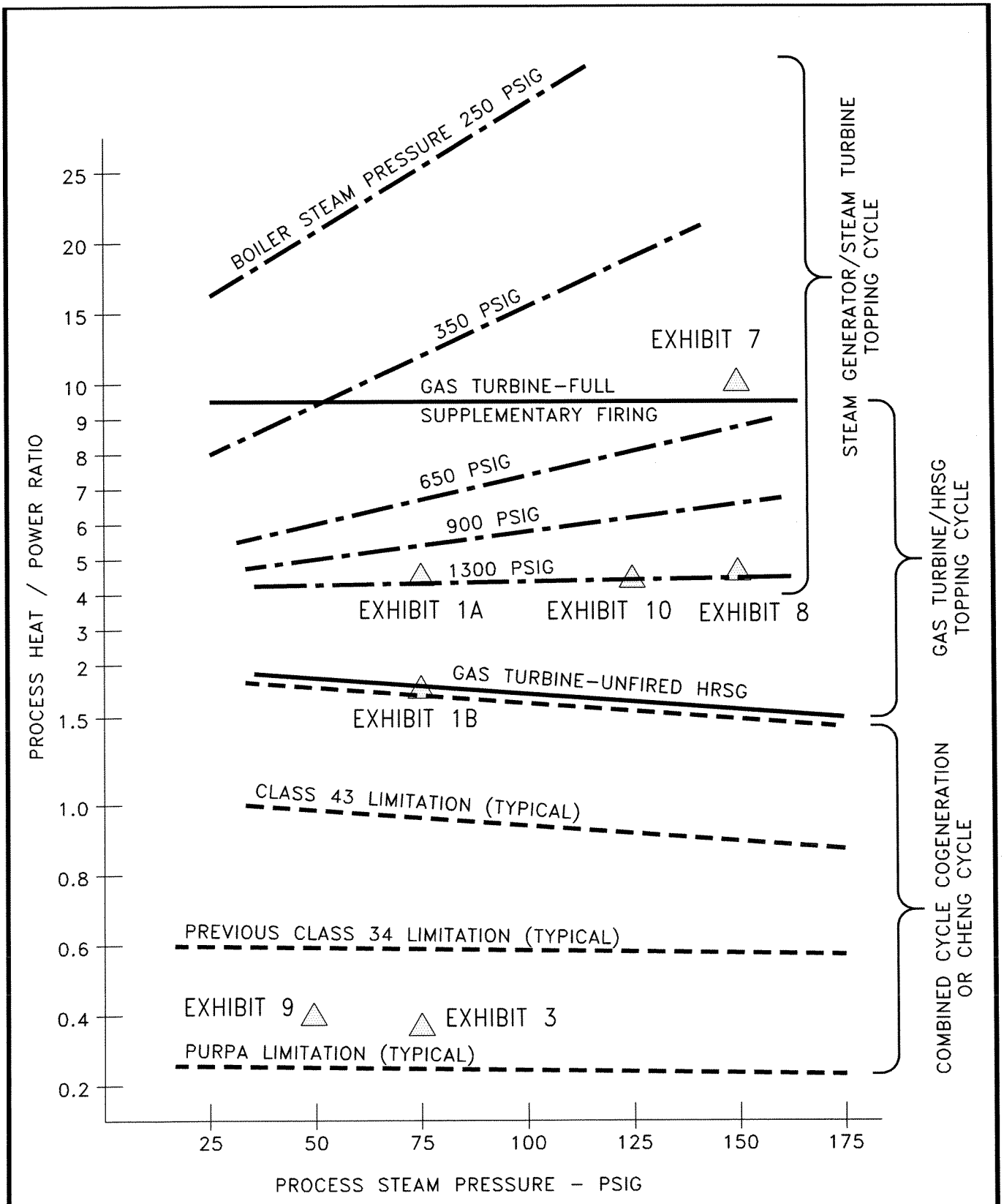

GRYPHON
INTERNATIONAL ENGINEERING SERVICES INC.

HEAT TO POWER RATIOS

JAN. 2000

COGENERATION PRINCIPLES
EXHIBIT 4

STEAM GENERATOR/BACKPRESSURE STEAM TURBINE

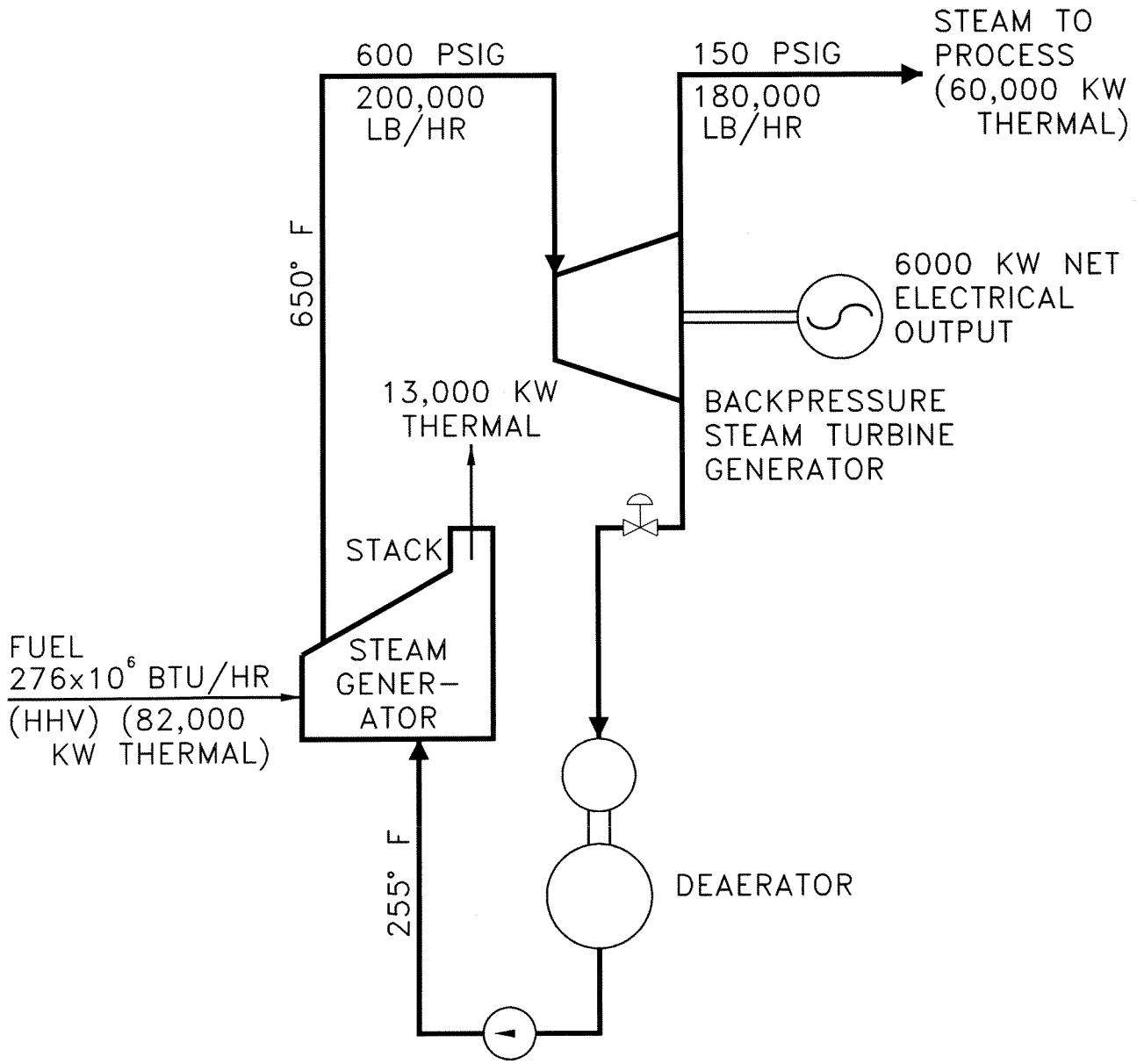

LOSSES AND AUXILIARY POWER = 3000 KW

HHV THERMAL EFFICIENCY $= \frac{6000+60,000}{82,000} = 80\%$

HEAT/POWER RATIO $= \frac{60,000}{6000} = 10$

GRYPHON
INTERNATIONAL ENGINEERING SERVICES INC.

TYPICAL HEAT BALANCE
ALUMINA PLANT APPLICATION

JAN. 2000

COGENERATION PRINCIPLES
EXHIBIT 5

Exhibit #5 – Steam-Generator and Back-Pressure Steam Turbine

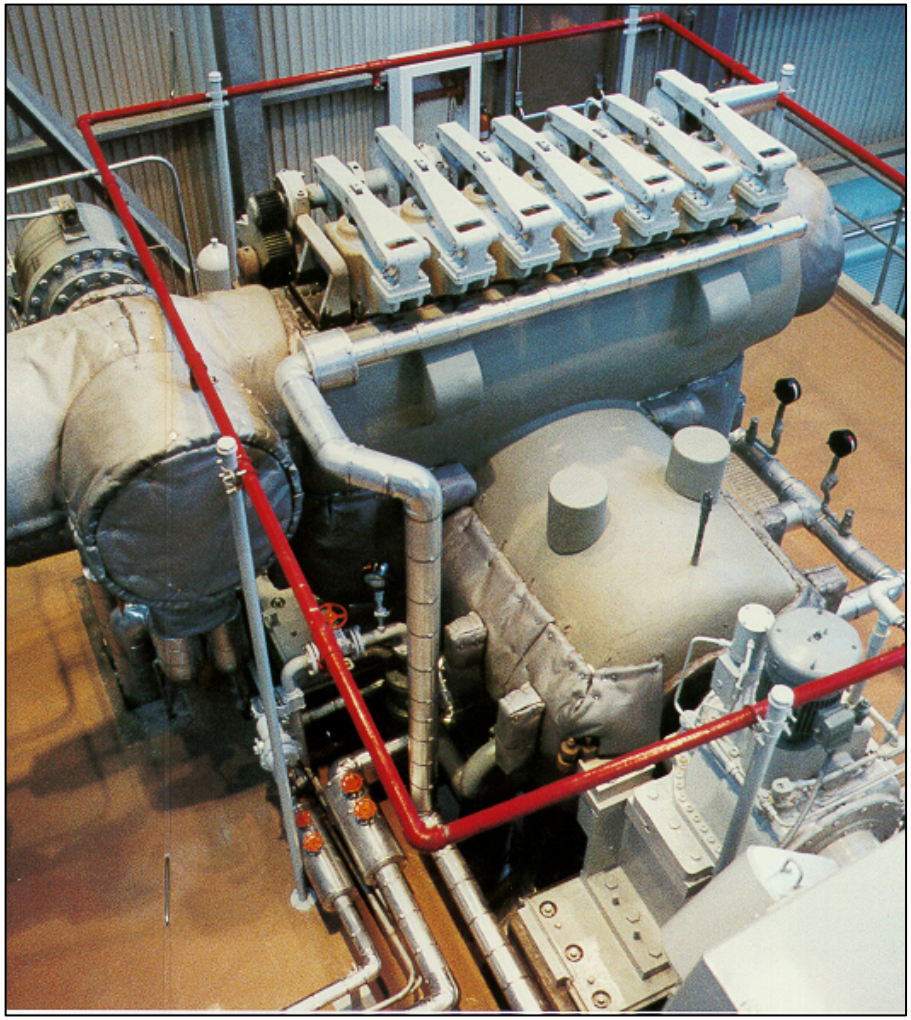

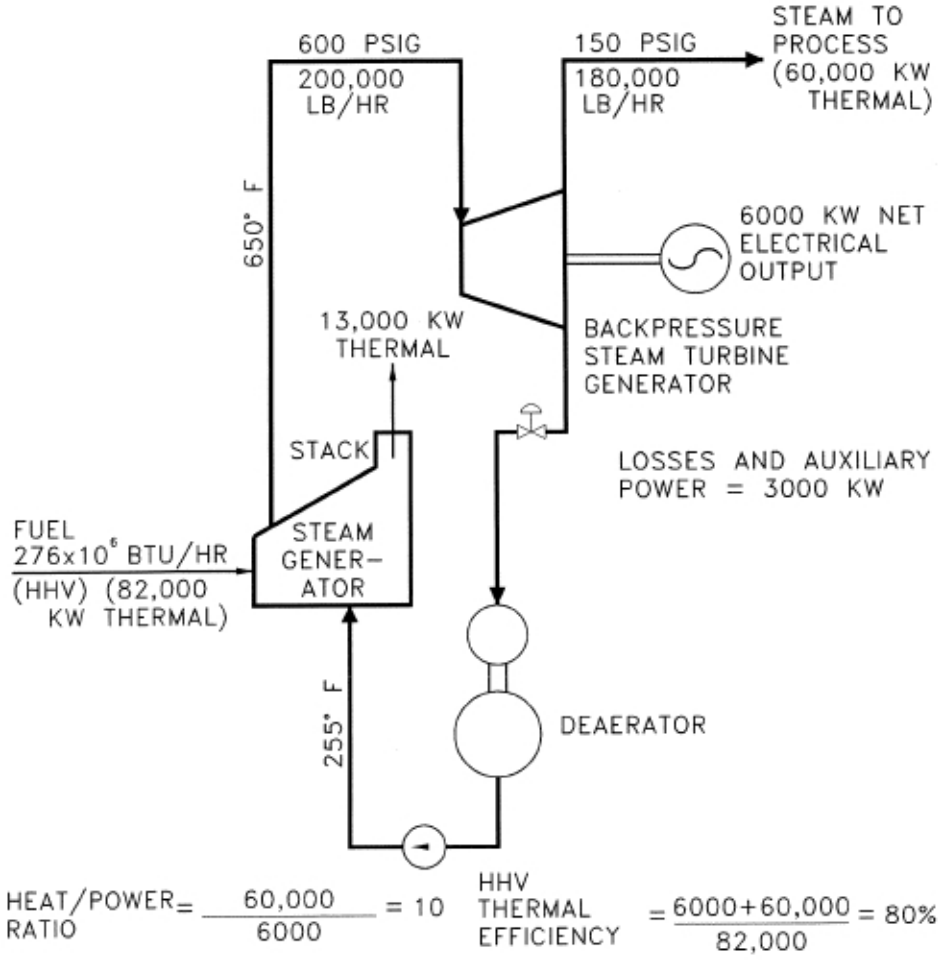

STEAM GENERATOR/CONDENSING STEAM TURBINE

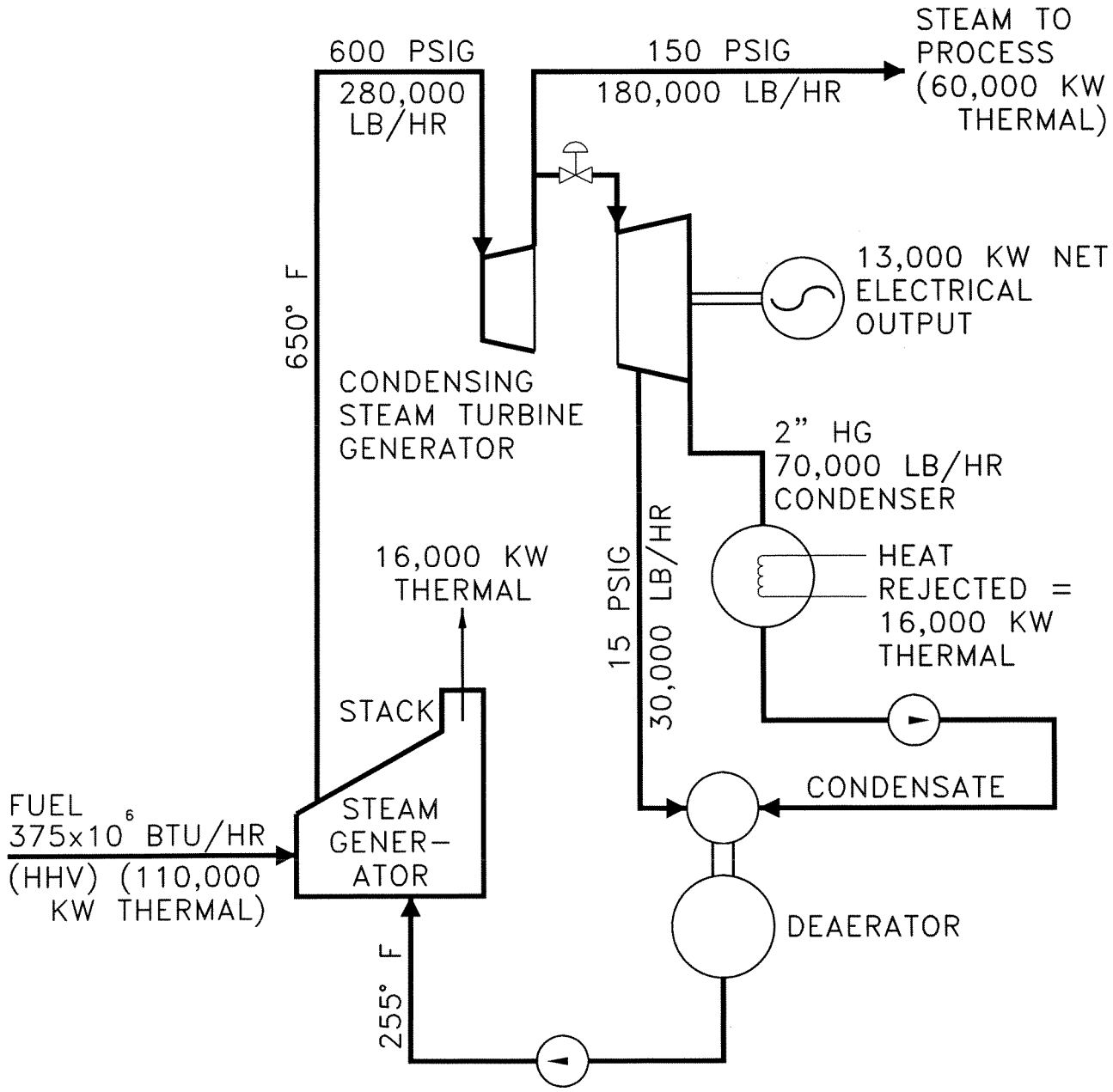

LOSSES AND AUXILIARY POWER = 5000 KW

$$\text{HHV THERMAL EFFICIENCY} = \frac{13{,}000+60{,}000}{110{,}000} = 66.4\%$$

$$\text{HEAT/POWER RATIO} = \frac{60{,}000}{13{,}000} = 4.6$$

GRYPHON
INTERNATIONAL ENGINEERING SERVICES INC.

TYPICAL HEAT BALANCE PULP & PAPER APPLICATION

JAN. 2000	COGENERATION PRINCIPLES EXHIBIT 6

COMBINED CYCLE COGENERATION

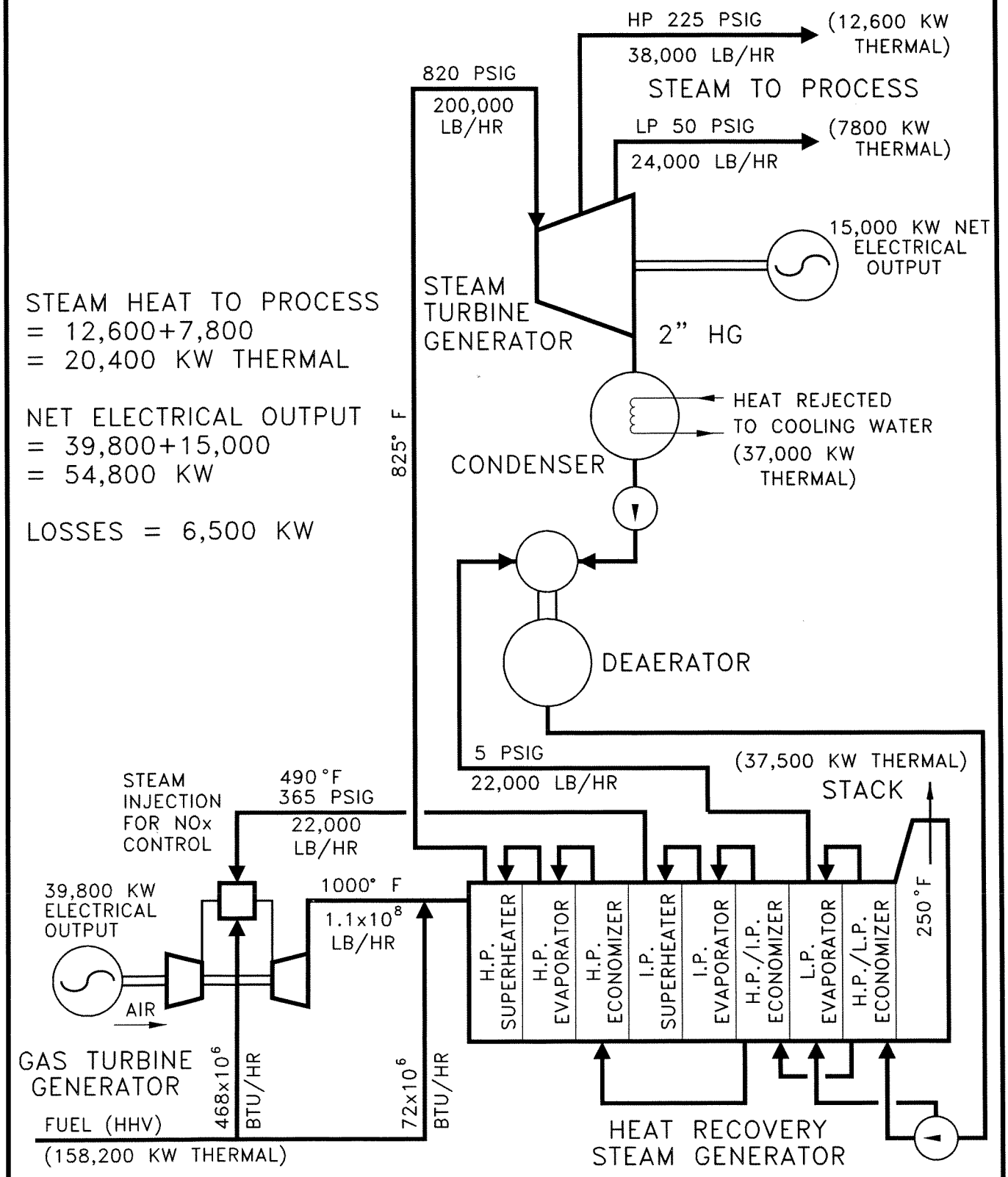

STEAM HEAT TO PROCESS
= 12,600+7,800
= 20,400 KW THERMAL

NET ELECTRICAL OUTPUT
= 39,800+15,000
= 54,800 KW

LOSSES = 6,500 KW

$$\text{HHV THERMAL EFFICIENCY} = \frac{54{,}800+20{,}400}{158{,}200} = 47.5\%$$

$$\text{HEAT/POWER RATIO} = \frac{20{,}400}{54{,}800} = 0.4$$

GRYPHON
INTERNATIONAL ENGINEERING SERVICES INC.

TYPICAL HEAT BALANCE COMBINED CYCLE APPLICATION

JAN. 2000

COGENERATION PRINCIPLES
EXHIBIT 7

Exhibit #7 – Combined-Cycle Cogeneration

GAS TURBINE GENERATOR/HEAT RECOVERY STEAM GENERATOR

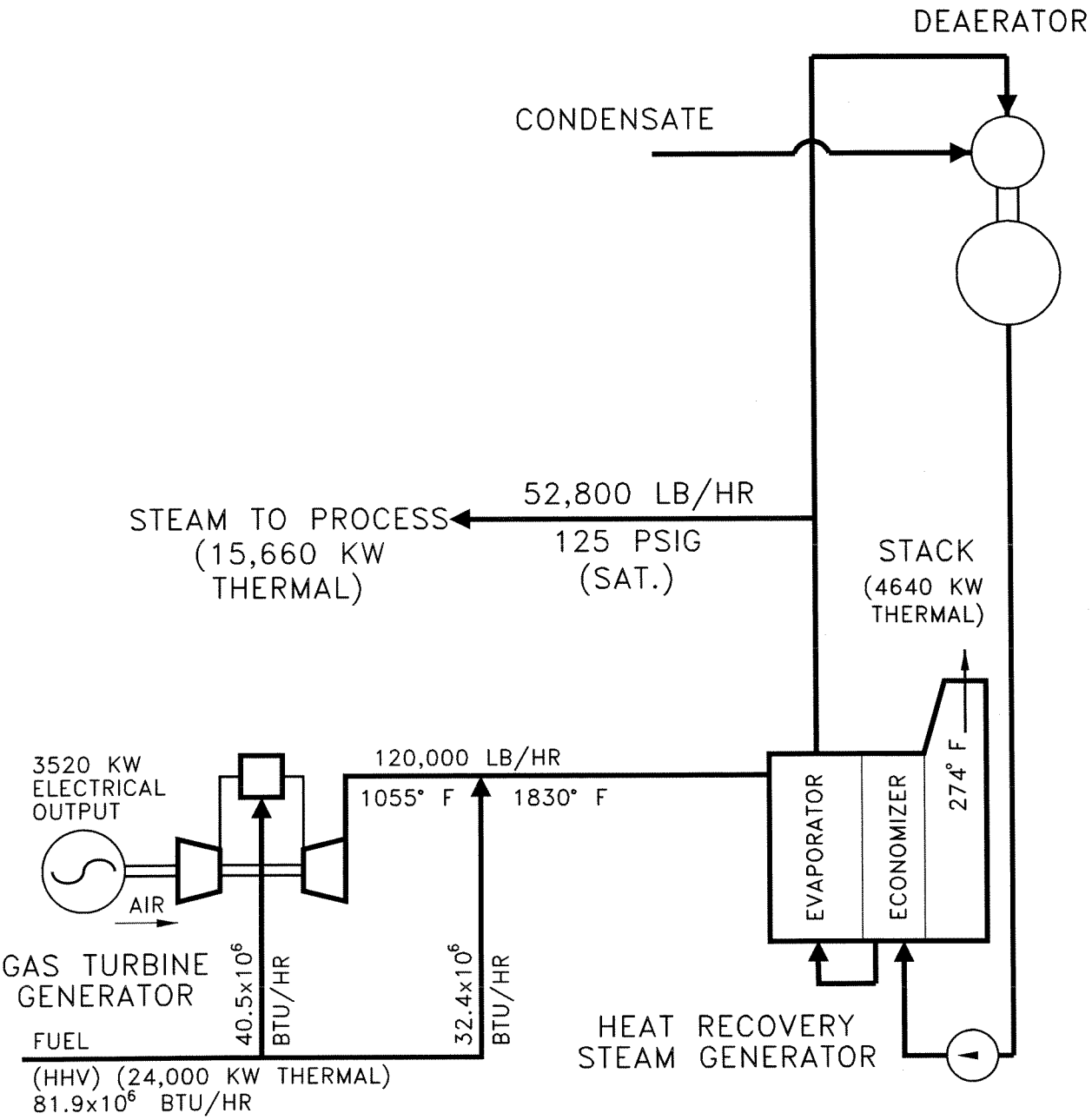

LOSSES AND AUXILIARY
POWER = 600 KW

$$\text{HHV THERMAL EFFICIENCY} = \frac{3520+15,660}{24,000} = 80\%$$

$$\text{HEAT/POWER RATIO} = \frac{15,660}{3520} = 4.4$$

GRYPHON
INTERNATIONAL ENGINEERING SERVICES INC.

TYPICAL HEAT BALANCE
SMALL PROCESS PLANT APPLICATION

JAN. 2000

COGENERATION PRINCIPLES
EXHIBIT 8

Exhibit #8 – Gas Turbine & HRSG

2D
3D
Road
Aerial
25 feet
10 m
© 2009 Microsoft Corporation © 2009 NAVTEQ © AND
Pictometry Bird's Eye © 2009 Pictometry International Corp
Pictometry Bird's Eye © 2009 MDA Geospatial Services Inc.

Road
Aerial

West Windsor Power - Windsor, Ontario

Sithe Global Power - Goreway Station - Brampton, Ontario